PACIFIC®

PRESS TECHNOLOGIES

PACIFIC HYDRAULIC PRESS

MODEL# 452 N

SERIAL# A1108

OPERATOR'S MANUAL

PACIFIC HYDRAULIC

MODEL 452N

STRAIGHTSIDE PRESS

INSTALLATION, OPERATION

&

MAINTENANCE MANUAL

PACIFIC PRESS & SHEAR, INC.

714 WALNUT STREET

MT. CARMEL, ILLINOIS 62863

PART #62825-100

INTRODUCTION

This manual has been prepared as an aid to management, operators, die setters and maintenance personnel who will be responsible for the operation of the Model N Series Pacific Hydraulic Straightside Press. The content and format are designed to give the reader a fast and easy reference to press description, installation, operation and service instructions.

To better understand your press and to use it safely and to your best advantage, we recommend that all personnel associated with the operation of the press study this manual thoroughly and, at the same time, refer to the electrical, hydraulic and outline drawings included for your particular press.

Bear in mind this manual covers the basic principles of the operation and maintenance of all Pacific Hydraulic N Series Presses. Some descriptions cover optional features that may not apply to your press unless it is so equipped.

KEEP THIS MANUAL IN CLOSE PROXIMITY TO THE PRESS FOR FREQUENT REFERENCE

BASIC DATA & CHARACTERISTICS OF PACIFIC HYDRAULIC PRESSES

CUSTOMER _____
Location _____
Pacific Representative _____

Serial ..... _____
Model Number ..... _____
Maximum Tonnage ..... _____
Recommended Maximum Punching Tonnage ..... _____
Outline Drawing ..... _____
Foundation Plan ..... _____
Electrical Control Circuit Drawing ..... _____
Hydraulic Circuit Drawing ..... _____

OTHER FEATURES:

_____
_____
_____
_____
_____
_____
_____
_____
_____
_____
_____

INDEX

1.0.0

MANAGEMENT

SAFETY GUIDELINES

Pacific feels that press safety is equally as important as the productivity of the press and, therefore, includes this section in the manual as a guideline to help and encourage management in maintaining an effective and controlled program for press safety. These guidelines are not intended to be a safety code but rather to define and point out specified areas of responsibility which, it is hoped, will receive the participation and leadership of all levels of management concerned with press operation. Because of the multitude of applications a press may be called upon to perform, it would be impossible for the press manufacturer to equip each machine with guards and safety devices that would effectively accommodate the diversified variety of tooling and potential applications to which the press could be adapted. It is you, the press user alone, who determines the type of dies to be installed, the type of material to be used and the method of feeding and unloading the work pieces.

Therefore, it is your responsibility to evaluate each operation and to determine and implement the best method of protecting the operator from injury at the point-of-operation in accordance with current federal, state and local codes and standards.

As press owners, managers and supervisors you must all accept the responsibility for the safe operation of the press equipment under your control. Pacific urges you to know and respect your machinery. Read and understand the safety guidelines and checking procedures outlined in this section and in the sections for operators, die setters and maintenance personnel. Thoroughly study and understand sections 4,5,6 and 7 of the ANSI B11.2 Standards (Draft) that have been provided with your press. Establish and promote a program of safety objectives with defined employee responsibilities that assure safe press working practices in your plant.

1.1.0 GENERAL OPERATING SAFETY

1) Management should promote safe practices and safe press operating procedures by establishing an effective plant safety program.

2) A knowledgeable and well trained safety coordinator should be responsible for plant safety requirements, regulations and enforcement.

3) The safety coordinator must investigate all accidents and "close calls." The causes should be analyzed, corrective action taken and accurate records maintained.

4) Establish press safety rules and inform each employee of his responsibilities.

5) Display in prominent locations the procedures to be followed in case of accidents. List names, addresses and phone numbers of physicians, hospitals and personnel who are to be notified.

6) It is the employer's responsibility to provide an adequate work area around the press that is clean, safe and uncluttered.

7) Provide safe and convenient methods and procedures for material handling.

8) Do not allow a press to be operated if it is poorly maintained, malfunctioning or in need of guards or safety devices that protect the operator from injury.

1.2.0 SAFEGUARDING THE POINT-OF-OPERATION

1) It is the employer's responsibility to evaluate each press operation and to determine and implement the best method of protecting the operator from injury at the point-of-operation.

2) The press must be guarded, in such a manner, or operating procedures established, that makes it impossible for the operator to place his hands or any part of his body in the die area.

3) Each press application must be examined and evaluated to determine if the safety devices or procedures are adequate before commencing operations.

4) The employer should become familiar with the many and various types of safety devices available in order to determine which type offers maximum operator protection for each press application.

5) The use of hand feeding tools are highly recommended for handling small work pieces. Provisions for safe part removal are equally as important as a safe feeding method.

6) Never allow press guards of safety devices to be bypassed or removed.

7) Do not release the press for the production before installing and testing all protective guards, covers and safety devices.

8) Evaluate all point-of-operation guards, safety devices and work procedures frequently while the press is in operation. Immediately correct any unsafe condition.

1.3.0 SUPERVISION AND SAFETY ENFORCEMENT

1) All levels of management must enforce every safety rule and regulation. To make press safety effective every violation should be reported, recorded and result in appropriate disciplinary action.

2) Never allow any operator, regardless of his experience, to start a new job assignment without a complete and detailed explanation of the job and the safe procedures to be followed.

3) It is the supervisor's responsibility to maintain absolute authority over the press controls. The actuation of the main disconnect switch, mode selector switch and other keyed switches should always be under his supervision. The keys should be removed and in his possession at all times to prevent unauthorized use or adjustment of the press.

4) Conduct frequent inspections of press operations. Be sure the operator and helpers are using proper safety devices and are working in a safe manner.

5) Never allow press guards or safety devices to be removed, altered, or bypassed.

6) Never allow untrained personnel to operate the press.

7) Never allow personnel who are under the influence of drugs of alcohol, or otherwise not physically or mentally alert to operate the press.

8) Never allow minors to operate or assist in the operation of a press.

9) Be alert to unsafe press or operating conditions. A poorly maintained press or a press or a press that is malfunctioning should be shut down until the unsafe condition has been corrected.

1.4.0 INSPECTION AND MAINTENANCE

1) To maintain a high level of press reliability and to obtain advance warning of any possible hazards or malfunctions a daily, weekly and monthly program of press inspection and preventive maintenance should be established.

2) A check list should be used and records maintained of all maintenance and repair work performed.

3) Only highly qualified, competent personnel should be assigned this job of inspecting and maintaining the press. They should be specifically instructed and have a thorough understanding of the controls and the operating and maintenance procedures outlined in this manual.

4) Establish and follow a safe shutdown procedure for press inspections.

5) To insure optimum performance and safe operating condition of the press careful inspections of the electrical and hydraulic systems should be made.

6) Auxiliary equipment and safeguards must be inspected and maintained in safe operating condition.

7) Releasing the press for production after inspection and maintenance should be the responsibility of qualified personnel assigned by management.

1.5.0 TRAINING

1) All personnel who will be associated with the operation of the press must read and have a complete understanding of the contents of this manual.

2) Management must assume the responsibility of training all personnel associated with press operation to eliminate accidents and injuries.

3) Only employees who understand and can communicate their knowledge of the press, its operation, its dies and safety requirements should be assigned the responsibility of training.

4) A supervisor must be knowledgeable in press operation, press guarding, safety guidelines, operator supervision, job instructions, and causes of accidents. He is also responsible for promoting safe working habits and attitudes of press operators.

5) An operator training program should include specific instructions in safety, safety devices, guarding, proper use of the press and correct procedures in performing every press job.

6) No operator should be given a press assignment that he does no fully understand.

7) Only thoroughly trained and responsible personnel should be allowed to operate or work on the press.

1.6.0 SAFETY EQUIPMENT DIRECTORY

Because of the many and diversified types of operations that may be encountered it is management's responsibility to evaluate each press application and to provide the best method of protecting the operator from injury at the point-of-operation. The following table lists various manufacturers who can furnish press guards, safety devices, hand tools and other auxiliary equipment that may be utilized for added press safety. The list is not all-inclusive nor is it intended to be a recommendation or approval by Pacific Press & Shear, Inc. as to the merits of the products or their adaptability to any particular application. We include these in the interest of safety and recommend that you consider several sources and products in order to obtain the best available solution for your press operations.

POINT-OF-OPERATION SAFETY DEVICES

MANUFACTURERS	PRODUCTS				
	Presence Sensing Systems	Interlocked Barrier Guards	Pull Back Devices	Safety Blocks	Hand Feeding Tools
Astco, Inc., 723 Dunnway, Placentia, CA 92670 (714)996-5420		●			
Bachmann Industries, Inc., P.O. Box 618 Los Alamitos, CA 90720 (213)430-7573	●				
Guardimation, Inc., P.O. Box 2228, Davidson, NC 28036 (704)892-0111	●				
Gordon Engineering Corp., Del Mar Drive Brookfield, CT 06804 (203)775-1895	●				
Dolan-Jenner Industries, Inc. P.O. Box 1020, Blueberry Hill Rd., Woburn, MA 01801 (617)935-7444	●				
Dual-Lite Company, Newtown, CT 06470	●				
Lind Engineering, 4432 N. Kedzie, Chicago, IL 60625 (312)267-0333		●			
Positive Safety Mfg. Co., 34990 Vokes Drive Eastlake, OH 44094 (216)951-2130			●		
Rockford Safety Equip., 4620 Hydraulic Rd. Rockford, IL 61109 (815)874-7891	●	●		●	●
Surty Mfg. Co., Route 3, Gleason, Wisconsin 54435 (715)536-6291		●			
Wilco Incorporated (Sick Optik), 113 S. Main St., Stillwater, MN 55082 (612)439-6516	●				
Weldotron Corp., 1532 S. Washington Ave., Piscataway, NJ 08854 (201)752-6700	●				
Tyco Instrument Div., 4 Hartwell Place Lexington, Mass. 02173 (617)861-7450	●				

2.0.0

SAFETY GUIDELINES FOR
OPERATORS

This section of this manual is offered as an aid to all personnel who are associated with the operation of Pacific Presses with the hope that job safety can be improved and accidents prevented.

Whether you have years of experience working with presses or whether you are new on the job this section is for your benefit. General and specific safety guidelines and caution notes are included here, and throughout the manual for your protection and to help you avoid injury to yourself and to your co-workers. Since it would be impossible to cover every situation that could arise the following list of points is not intended to be complete nor does the order in which they are listed relate to their importance. It is good practice to evaluate the safety factors of every set-up and operating procedure before starting the press. It is your responsibility to immediately report any unsafe condition or unusual performance to your supervisor.

2.1.0 BEFORE STARTING PRESS

1) Never operate the press until you have read and fully understand the safety, control description and operating sections in this manual.

2) Make absolutely sure motor is off and safety blocks are installed before reaching into the die area.

3) Inspect the press before each shift for loose, worn or broken parts. Report any unsafe conditions to your supervisor immediately and do not operate the press until the necessary repairs are made.

4) An important part of press safety is good preventive maintenance. Keep your press clean and in good condition by daily cleaning.

5) Clean your work area frequently. Keep it uncluttered and free of loose tools, discarded work pieces, rags, wires, oil, grease, water or anything that can inhibit your movement or cause you to trip or fall.

6) Inspect press dies, and handling equipment for safe operating condition.

7) Check tightness of clamps, bolts and locknuts that hold dies in position.

8) If required, make sure proper hand tools are available in good condition for manually feeding and removing material from the dies.

9) Be sure press guards and safety devices are correctly installed and in their proper position.

10) It is your employer's responsibility to evaluate each press operation and to determine and implement the best method of protecting you from injury at the point-of-operation in accordance with current federal, state and local codes and standards.

11) Never attempt to bypass or remove and point-of-operation guard of safety device on your press. They are there for your protection.

12) When working with large material be sure work supports are installed and are adequate to support the work pieces properly.

13) See that work tables, skids, storage bins etc., are properly positioned and are adequate for storage of the material and work pieces you will be handling.

14) Be alert for possible hazards or safety irregularities that could cause injury.

2.2.0 STARTING THE PRESS

1) Never start the press until you have made the inspections outlined in Section 2.1.0.

2) Before you start the press be sure you know how to stop it instantly (see Sections 5.5.1 thru 5.5.4).

3) Follow the start-up procedure as outlined in Section 7.1.0.

4) Before starting production, test-cycle the press several times. Observe carefully that the press and dies are functioning properly. Report any unsafe condition or unusual press performance to your supervisor.

2.3.0 PRESS OPERATION

1) Never place hands, fingers, arms, or any part of your body in the die area or near any moving part of the press.

2) Never lean against the slide, or the bed bolster area of the press.

3) Pay attention to the warning and caution signs on the press. They are there for your benefit.

4) Never bypass, remove or alter press guards, or safety devices.

5) When manual loading of large material is necessary hold the work piece properly to avoid possible injury from the moving part during the work process.

6) For manual loading or unloading of small parts use proper hand tools or support devices that keep hands from close proximity to the die area.

7) Use only hand tools that are in good condition.

8) Never reach into the die area if dies require lubrication. Use only swabs, brushes, etc., with long handles.

9) Never stack parts or other objects on the bed bolster or in the die area. Use part containers and scrap bins of sufficient size to accommodate the job.

10) Use care and judgement in work you are doing. Take the time to evaluate the operation--is it safe? Are you working a safe procedure?

11) Stay alert at all times. Don't become overconfident and careless. Avoid inattention, preoccupation and distractions.

12) When leaving the press always have a supervisor shut off all power to the press. Never leave the press running unattended.

13) If you leave the press for any length of time always check to make sure the stroke setting and die set-up are as you left them before restarting the press. They may have been disturbed during your absence.

14) Know who or where to call for immediate help in the event of an emergency or injury.

15) Have all injuries treated no matter how small.

2.4.0 SHUTTING DOWN THE PRESS

Whenever the press is not in use, even for short periods of time, the press should be shut down with the dies in the closed position.

1) Return the slide to its top position.

2) Have supervisor turn Mode Selector Switch to "Inch".

3) Have supervisor turn Mode Selector Switch to "Off" and remove key.

4) Stop motor by pushing Motor Stop Button.

5) Have supervisor padlock the disconnect switch in the "Off" position and remove key.

6) Never leave an unattended press running.

3.0.0

SAFETY GUIDELINES FOR

DIE SETTERS

The die setter's job is the most important to the safe operation and the productivity of the press. His job is also the most dangerous since he must work directly under the slide while installing the dies. Therefore, it is important that only well trained and highly capable individuals who are thoroughly familiar with the operation of the press, dies, and safety procedures, be assigned to this responsible job. It is the employer's responsibility to provide the proper tools and safety equipment to minimize the hazards of diesetting. Safety blocks, die pullers, die trucks, platforms, and other equipment must be provided to make die setup as safe as possible. Die setters must read and thoroughly understand sections 4,5,6, and 7 of the ANSI B11.2 Standards (Draft) that have been provided with the press. Because of the many varieties of die applications that can be used, specific setup procedures have not been included in this manual. The following general diesetting safety precautions, however, must be followed at all times.

3.1.0 BEFORE INSTALLING DIES

1) Never attempt to install or remove dies until you have read and fully understand the safety, control description and operating sections in this manual. You must have no doubts regarding the function and proper operation of press controls.

2) Inch the slide up to the top of the stroke and install safety block. Have supervisor place Mode Selector Switch in the "Off" position and remove key to prevent unintentional start.

3) Make absolutely sure motor is off and safety blocks are installed before reaching into the die area.

4) Clean bolster surfaces, clamps, and dies before installation. Misalignment caused by dirt, chips or other foreign matter could result in damage to the operator.

3.2.0 DIE INSTALLATION

1) Never install worn or damaged dies. Dies should be carefully inspected, cleaned, and lubricated before installation.

2) To prevent overloading of the dies use only proper dies for the size of press being used. Always use tonnage control when using dies that are less than press capacity.

3) To avoid unnecessary exposure to hazards the size of the die should, within reasonable limits, match the size of the work piece.

4) Check the job requirements such as die type, required press tonnage, stroke length, shut height and others.

5) Dies should be stamped to indicate die weight, and size.

6) All special dies should be stamped to indicate die weight, size, stroke, and tonnage requirements.

7a) When setting dies for the first time adjust the open height stop for maximum opening.

b) Have supervisor place Mode Selector Switch in the "Inch" Mode and start press. Raise the slide and install safety block.

c) Clamp lower half of die set firmly in place on the bed bolster. Be sure bolts are tight and in good condition so they will not work loose during operation.

d) Remove safety blocks.

e) Lower the slide until the upper half of die set can be clamped onto the slide bolster.

8) Use the sufficient clamps and bolts of the proper size to hold dies firmly in place. Any shifting of the dies can cause serious damage and possible injury to the operator.

9) Before cycling the press make all necessary adjustments. Adjust stroke to exact desired length. Adjust open height to provide adequate clearance for safe material handling. Be sure depth stop and open height stop are tightly set.

3.3.0 CHECK DIE INSTALLATIONS

1) Be sure bolts and clamps are securely fastened and die area is clean and unobstructed.

2) Check installation and adjustment of any auxiliary equipment that may be used in the die setup.

3) Install all guards, covers and safety devices.

4) Study the dies to determine direction of travel the work piece will take, if any, during the forming. Make certain that all parts of your body will be clear of the material travel and die area when operating the press.

5) Determine which type of handling tools will be best suited to the job and use them when making trial parts.

6) Be sure all personnel are clear of the press ares.

7) Inch the press through one cycle and check accuracy and die alignment. Make any necessary adjustments.

8) Before releasing the press for production cycle the press several times. Observe press operation to be certain dies, auxiliary equipment, guards and safety devices are functioning properly.

9) Do not leave tools, bolts or other obstructions in or near the die area.

10) Advise supervisor of any particular care that must be taken to provide for safe operation

11) Never release a press for production until corrective action is taken to remedy an unsafe condition.

12) Check press and dies frequently. Clean and adjust dies as required.

3.4.0 REMOVING DIES

1) Block the slide.

2) Have supervisor place the Mode Selector Switch in the "Off" position and remove key to prevent unintentional start.

3) Shut off all power to the press.

4) Make absolutely sure motor is off before reaching into die area.

5) Remove clamps to lower half of die set.

6) Restart the press and lower the slide enough to support the upper die.

7) Remove all clamps securing upper half of die set.

8) Repeat steps 1 - 4.

9) Remove die set.

10) Use proper chains, slings, cranes, or other handling equipment for safe die removal.

11) Use fork lift or die truck of sufficient capacity to return dies to storage area.

4.0.0

PRESS COMPONENTS
& NOMENCLATURE
PACIFIC MODEL N STRAIGHTSIDES

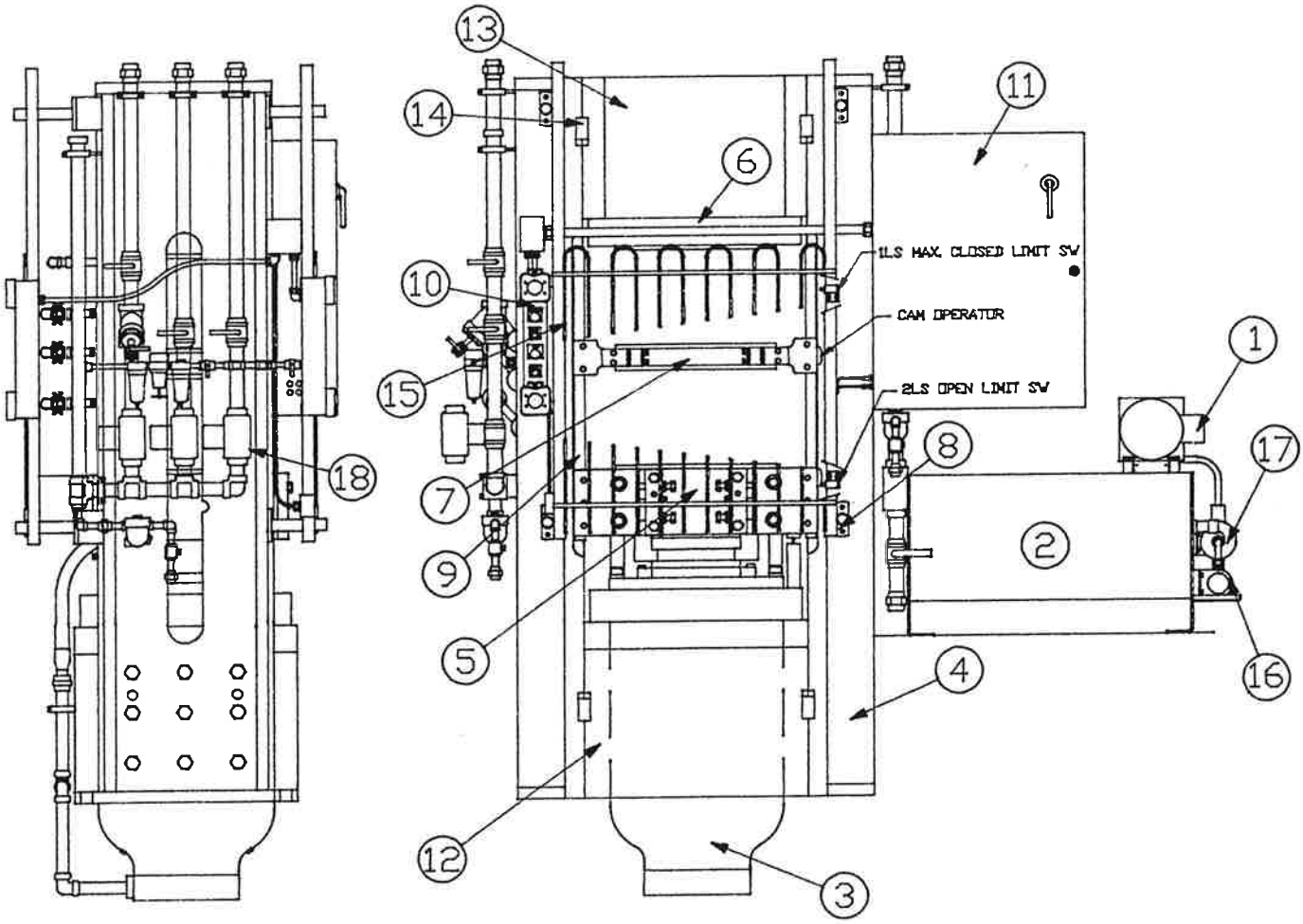

1. POWER UNIT
2. RESERVOIR
3. CYLINDER
4. SIDEPLATES
5. BOLSTER LOWER
6. BOLSTER UPPER
7. BOLSTER CENTER
8. GIBBING
9. SLIDEWAY
10. TWO HAND CONTROL
11. CONTROL ENCLOSURE
12. BED
13. CROWN
14. WEDGES
15. GUARD
16. OIL COOLER
17. PUMP-MOTOR FILTER COOLER SYSTEM
18. STEAM PIPING

SYMBOL	DESCRIPTION	PART NUMBER	QTY.
15	SCR SHS 3/8"-16 UNC X 3/4"	6101486	2
14	NUT LOCK 1/2"-13 UNC	6101545	4
13	SCR HHC 1/2"13 UNC X 5"	6100977	4
12	BEARING BOSTON #B2428-16	6118410	2
11	SPACER-RACK & PINION	61655-100	2
10	BOLT SHOLD. 3/4" X 2"	6118409	2
9	WASER BELL. Mc M#9712K92	6118408	12
8	RACK Mc M#6295K213 (MAKES 2)	61652-100	1
7	GEAR SPUR Mc M#6325K62	61651-100	2
6	RACK Mc M#6295K212 (MAKES 2)	61650-100	1
5	STUD 3/4"-10 UNC X 8"	61646-401	2
4	NUT RACK & PINION	61649-100	2
3	RETAINER RACK & PINION	61648-200	4
2	SCR SHC 1/4"-20 UNC X 3"	6101126	8
1	BOLT SHOLD. 1 1/2" X 2"	6118407	2

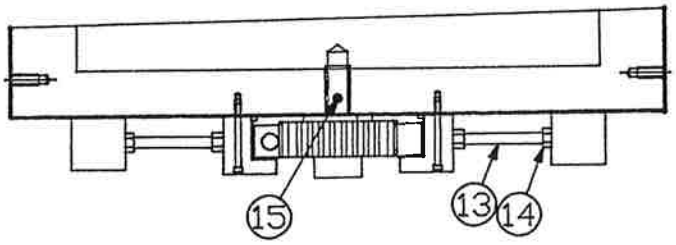

FLOATING BOLSTER

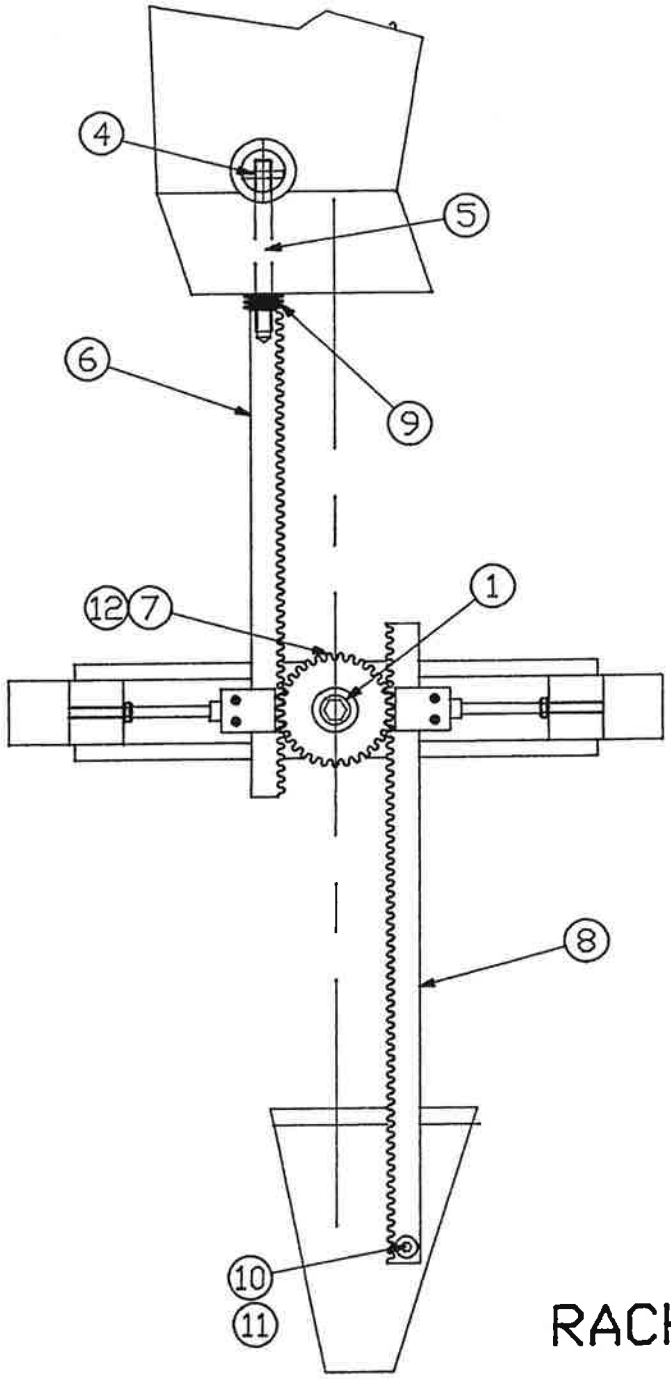

RACK & PINION ASSEMBLY

452N 24" STK.

SYMBOL	DESCRIPTION	PART NUMBER	QTY.
10	SCR.-H.H.C. 1"-8UNC X 6" LG.	6201062	1
9	TRIANGULAR GIB	61622-200	1
8	DOWELL PIN-.75" X 3" LG.	67000186	2
7	SCR.-H.H.C. 1"-8UNC X 4" LG.	6101054	4
6	SCR.-H.H.C 1/2"-13UNC X 3" LG.	6100967	3
5	WASHER-1" FLAT WROT	6105626	2
4	NUT-HEX JAM 1"-8UNC	6101549	2
3	SCR.-H.H.C. 1"-8UNC X 5 1/2" LG.	6101061	2
2	GIB STOP BLOCK	61621-200	1
1	GIB HOLDER	61620-200	1

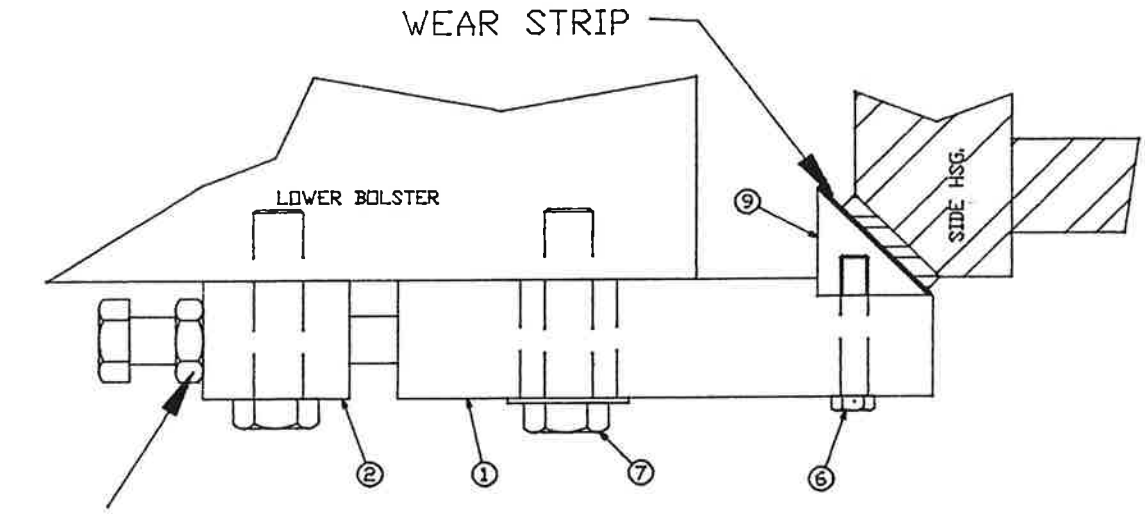

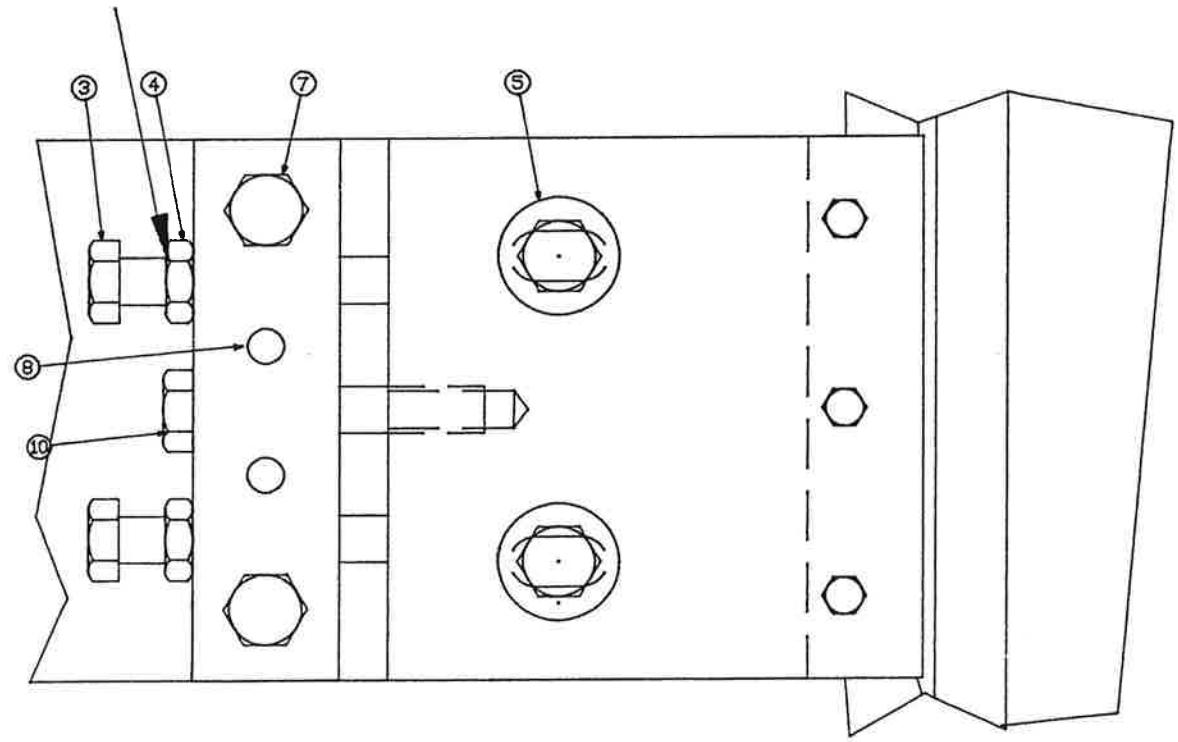

GIBBING ASS'Y.

452N

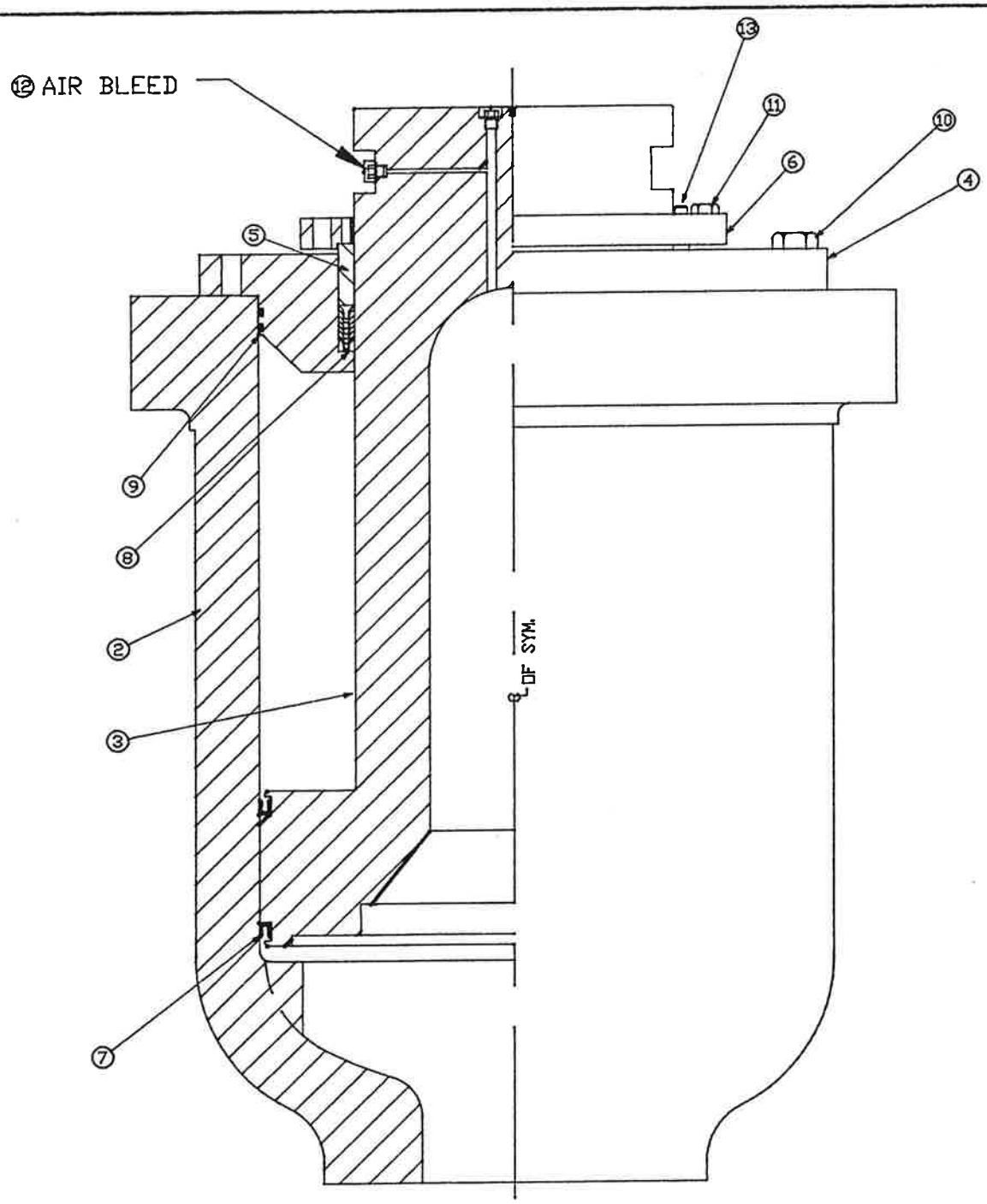

SYMBOL	DESCRIPTION	PART NUMBER	QTY.
13	SCR SHC 3/8-16 X 2" LG.	6101139	4
12	PLUG O'RING SAE #4	6107422	2
11	SCR. HH .75-10 X 3" LG.	1658042	16
10	SCR HHC 1.25-7 X 4" LG.	6101078	20
9	O-RING 24" O.D. X .250 BUNA N 70	6102092	2
8	PACK ROD 16.5 X 15 X 2.484 HGT.	6118287	1
7	U-CUP 24 O.D. X 23 I.D. X .75 HIGH	6118286	2
6	RETAINER	31011-200	1
5	CASTING BUSHING	31010-200	1
4	HEAD LOWER CYLINDER	33818-300	1
3	PISTON 24" DIA.	61602-300	1
2	CYLINDER FINISHED	36993-400	1
1	CYLINDER ASS'Y 24" DIA.	61600-400	1

CYLINDER ASSEMBLY

24"DIA. CYL. 15"DIA. ROD

452N 550N

5.0.0

INSTALLATION

& PRE-START-UP PROCEDURE

5.1.0 PRE-INSTALLATION INSTRUCTIONS

Before installing the press read this entire manual carefully and study the accompanying electrical, hydraulic and outline drawings in order to familiarize yourself with the components and operating characteristics of your particular press.

It is most important to fully understand section 2.0.0 "Operator Safety Guidelines". Before the initial press start-up be thoroughly familiar with and understand all press controls and their adjustments. Review all guarding requirements and make sure appropriate guards or devices are properly installed. Follow, in detail, all installation procedures and instructions as outlined in this section.

5.2.0 SHIPPING & RECEIVING

Each Pacific Straightside press is completely assembled and given a thorough operation run-in and test at our factory. All components are inspected and adjusted for performance according to manufacturing specifications. Power unit valves have been pre-set for proper operation and all adjustable valves are safety wired and sealed. Lubrication points are correctly serviced.

After testing, the press is prepared for shipment to prevent damage during transit. Rust preventative is applied to the exposed machined surfaces.

Knocked down Straightside presses are shipped with the main frame disassembled and components shipped with all wiring number coded.

Upon receiving your press, visually inspect for any damage that may have occurred during shipment. If the press or any component has been damaged notify the carrier about your claim and inform our factory. With all F.O.B. factory shipments, title to the press is transferred to the customer on the acceptance of shipment by carrier.

5.3.0 FOUNDATION

Outline and foundation drawings are forwarded in advance of the press shipment. The foundation drawings show limiting dimensions and other recommended construction details. Reinforced concrete details are to be furnished by the customer to suit local soil conditions. After the press is delivered it should be thoroughly cleaned and then placed into position to be lowered over the foundation bolts. Presses shipped knocked-down should be assembled directly over the foundation in order to be able to lower over the foundation bolts. Set-up press shipment is used on small and medium size hydraulic straightside presses. Install the machine on the foundation in accordance with the foundation drawing accompanying the machine.

5.4.0 UNLOADING & LIFTING

Remove all accessories and boxes attached to the skids so these parts will not be damaged while handling the press. The press or press parts should remain on the skids until press is placed under the handling equipment.

WARNING: Check capacity of crane or hoist. Be sure it is capable of safely lifting the weight involved. (See Foundation Drawing for press weight). Check condition of cables, hooks, and other lifting equipment. Adjust cable length so press will remain upright while suspended.

Figure 1 shows the lifting points designed into the press for ease of handling and illustrates the correct arrangement of attaching chains or cables when lifting a set-up press. Use only the lifting points indicated and adjust cable length so press remains upright while suspended.

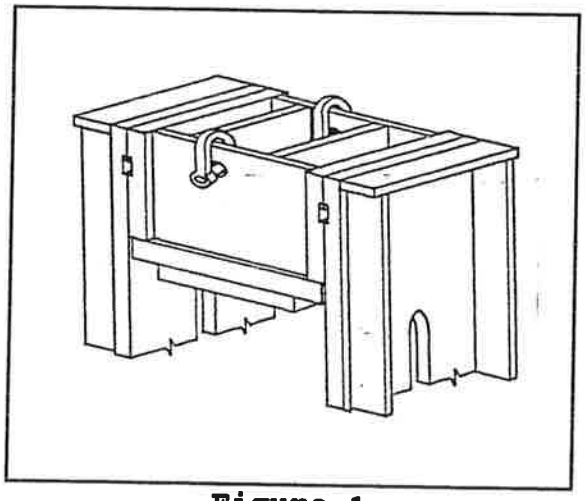

Figure 1
LIFTING POINTS

5.5.0 CLEANING

After the press is delivered is should be thoroughly cleaned. Using a good commercial grade solvent, remove the rust preventative and any dirt and grime that may have accumulated during shipment.

CAUTION: For safety, use only a low flash point cleaning solvent. Do not use air for cleaning the press since this could cause dirt to be blown into the moving parts and introduce galling.

NOTE: It is important to remove the drain plug on the bottom of the power unit tank and completely drain any remaining oil and any water that may have accumulated due to condensation. To facilitate subsequent draining of the tank, it is suggested that a nipple and shut-off valve be installed at this time.

5.6.0 ASSEMBLY & INSTALLATION

1) Place bed on timbers in the foundation pit high enough to allow uprights to clear the top of the foundation bolts.

2) Install side plates to the bed:

   A. Carefully align dowel pin holes between the bed and side plate and install dowel pins.

   B. Insert lower key wedges, opposite end for end with the installed wedges. Do not tighten.

NOTE: Keys are drilled on the outboard side. They must be easily accessible.

3) Using the capscrews, tighten the bed to the side plate.

4) Lower the bed and side plate onto the foundation pads.

5) Level the bed left-to-right and front-to-back using a precision level on machined surfaces only.

6) If the press is equipped with an optional die cushion system it should be installed at this time. See section 5.8.0.

NOTE: Do not connect the die cushion system to the air/oil accumulator tank at this time.

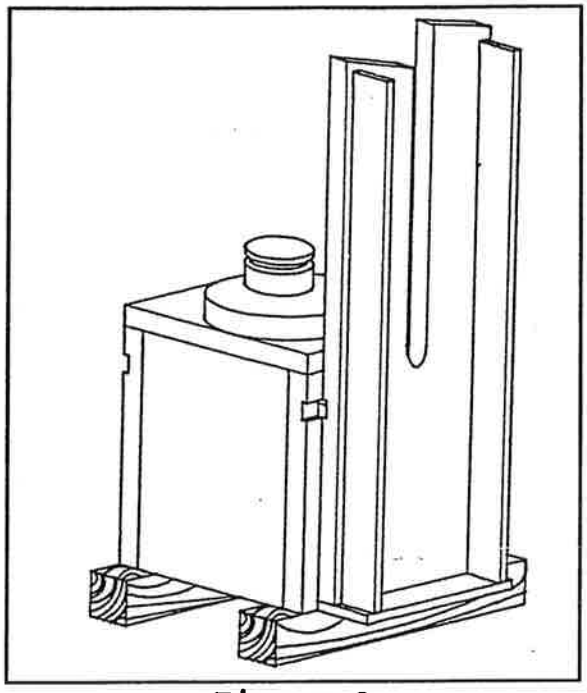

Figure 2
SIDE PLATE ASSEMBLY

7) Install the lower bolster by aligning with piston.

   A. Install keepers to bolster.

8) Position the lower bolster and center it front-to-back and left-to-right with respect to the upper bolster.

9) Install the crown and upper bolster assembly.

NOTE: To facilitate lowering the crown through the side plates spread the side plates apart left-to-right using suitable jacks and timbers.

   A. Carefully align the dowel pin holes between the crown and the side plates and install the dowel pins.

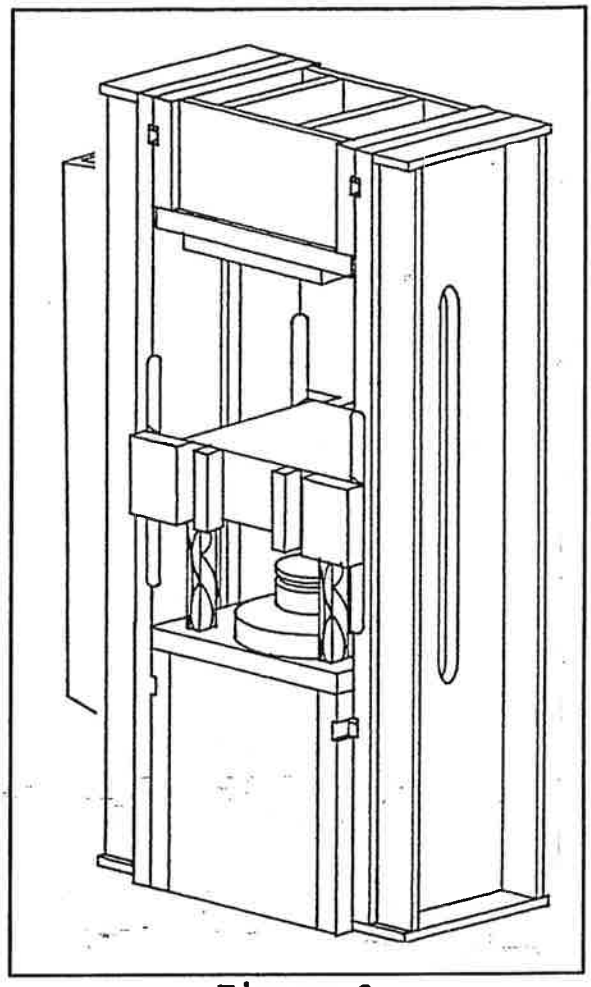

Figure 3
SLIDE & CROWN ASSEMBLY

   B. Install upper key wedges, snug but not tight.

   C. Tighten capscrews.

10) Install front and back gibbing assembly. The gib locking screws hold the triangular gib in place. Tension on the capscrews holds the gib assembly to the slideway.

11) Tighten the screws that adjust the back gibs against the slideway until the gibs are just bearing against the slideways.

Tighten the locking screws that hold the gib against the bolster. (Tighten both top and bottom capscrews at both ends of the press).

12) Tighten the capscrew that adjusts the front gib assemblies until the gib is held against the slideway. (Tighten both top and bottom capscrews at both ends of the press).

The gib can be adjusted to bring the gibs toward the slideways. Check with a feeler gauge to get the proper clearance of .004". As the gib is pushed in with the adjusting capscrews, the locking capscrew must be loosened enough to relieve the tension. The locking capscrew can then be tightened when the proper adjustment is achieved.

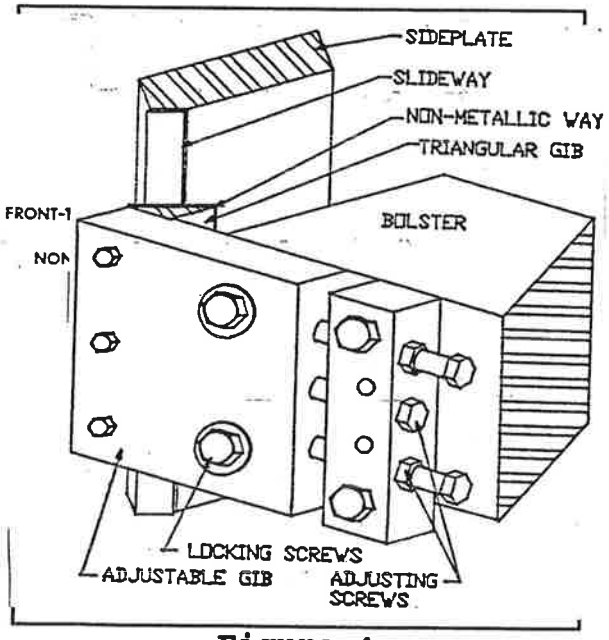

Figure 4
GIBBING ASSEMBLY

13) Repeat step 11 & 12 on both front and back.

14) Install the power unit.

15) Complete piping hook-up. (See section 5.9.0 "Power Unit Piping Connection").

16) Complete electrical hook-up. Wires are number coded. (See sections 6.11.0 "Electrical Connection and Checklist" and 6.12.1 "Motor Connection").

17) Fill power unit with oil. CAUTION: Before filling with oil, remove the drain plug on the bottom of the power unit tank and completely drain any oil that may have been left in the tank after testing in our plant. (See section 6.10.0 "Hydraulic Oil"). For future oil changing, a valve should be installed on the drain before filling with oil.

18) Recheck the previous steps to make certain all the assembly procedures have been followed correctly.

19) The piston must be advanced in order to complete the lower bolster/piston connection, and alignment with upper bolster.

20) Read and follow the procedures in section 6.0.0 "Initial Start-Up" before starting the press.

21) Set press controls for "Set-Up" and "Inch".

22) Press "Run" buttons to advance lower bolster to the closed height.

23) With piston advanced, slowly open the "Air Bleed" to allow trapped air to escape from the top of the piston.

A. Repeat until only oil escapes.

24) Using the gibbing assemblies align lower bolster with the upper bolster.

25) Tighten capscrews on the piston keepers after aligning lower bolster. The press is now assembled to the same extent as a set-up press.

5.7.0 LEVELING THE PRESS

The importance of keeping the press level cannot be emphasized too strongly. The accuracy of the work depends largely on keeping the machine leveled.

Many presses are shipped with the bolster plate in place but it should be checked for tightness before leveling. In order to properly level the press, the following procedure should be followed using a good accurate machinists's level.

The bolster plate should be clean and free of nicks so that all readings will be accurate.

Place precision level on top of bolster and level press at front and back, right and left by placing shims between the foundation steel pads and the upright seats until level.

Shim solid between the frame and base plate adjacent to all foundation bolts. Remove jacks and wedges. Do not leave them in place.

Tighten foundation bolts firmly and recheck to make sure the press is level and the total weight is proportionately bearing on each foot, front and rear. If the press can be pulled into or out of level with the anchor bolts, the shims are not properly installed and should be rechecked.

DO NOT USE GROUT.

Due to possible settling of new foundation, it is recommended that the press be checked for level after the first month and re-leveled if necessary. Also check 3-4 times a year to ensure long slide-way life.

5.8.0 DIE CUSHION INSTALLATION (Optional)

NOTE: If your press is equipped with optional die cushions DO NOT ATTEMPT TO INSTALL THE DIE CUSHION SYSTEM UNTIL THE PRESS HAS BEEN INITIALLY STARTED UP AND THOROUGHLY CHECKED FOR SATISFACTORY OPERATION AS OUTLINED IN SECTION 6.0.0.

The die cushions consist of one or more hydraulic cylinders connected through a series of control valves to an air/oil accumulator tank. The force required on the blank holder can be controlled within limits by the adjustment of the pressure control valve or valves located in the piping system. One valve may control one or more cushion cylinders. Check your particular installation and your hydraulic control diagram.

A pressure gauge is furnished to show cushion cylinder pressure and to aid in making pressure adjustments when multiple pressure control valves are used.

After completing all of the steps in the Initial Start-Up Procedure (Section 6.0.0) refer to the die cushion drawing and install as follows:

1) Check all mounting bolts for tightness.

2) Make sure all piping and fittings are tightly connected.

3) Open the drain cock of the accumulator tank and drain off any oil or moisture that may be present in the tank.

4) Fill the accumulator tank to the proper oil level as indicated on the hydraulic drawing. We recommend the use of a good hydraulic oil having a viscosity of about 100 to 150 SSU at 100F. The oil should have rust preventative, anti-oxidation, and anti-foam additives.

5) Connect air supply to the "T" on top of the accumulator tank.

NOTE: Air supply, shut off valve and separator are not provided and must be supplied by customer.

6) Open shut off valve and charge tank with 125psi clean, dry air.

CAUTION: KEEP HANDS CLEAR OF PIN PAD WHICH WILL RISE WHEN THE TANK IS CHARGED.

7) If desired, the air supply need not be connected permanently, as a periodic charge will replace air lost by leakage. The accumulator tank is normally sized for less than 15% rise in air pressure over the initial charge when all of the cylinders are at the bottom of the designated stroke.

8) The accumulator air pressure provides the force for returning the cushion cylinders to their top position as well as off-setting the additional load caused by stripping, and/or, the weight of the blank holder or draw ring. The cylinder return speed also becomes a function of the air pressure in the accumulator tank.

9) Open bleed valve on cushion cylinder head and bleed off trapped air. When air flow changes to oil flow close the bleed valve.

10) Install pressure pins on pin pad through the holes in bed bolster. Pins should be arranged so the blank holder load is balanced from front-to-back and left-to-right in respect to the bed and pin pad. The center of the load should also be located longitudinally between the press cylinders to allow the maximum tonnage of the press to be delivered. For long piston packing life, the resultant pressure pin load should be applied as close to the center of each cylinder as possible.

11) Have supervisor place the Mode Selector Switch in the "Inch" mode and start the press.

12) Adjust the system for minimum pressure by turning the knob on the die cushion tonnage control valve counter-clockwise to its full stop.

13) Advance the slide and push pressure pins and cushion cylinder down.

NOTE: Air trapped in the cylinders or piping will increase the amount of pre-travel required before pressure equilibrium is established. This will be approximately proportioned to the air volume. **It is therefore important to remove air from the system by proper bleeding.** Bleed valves for this purpose are located at the high points of the cylinders. Any unusual stripping applications may cause uneven cushion cylinder return speeds in multi-cylinder arrangements. This should be taken into consideration in the die design, especially when the stripping load may vary both in magnitude and location. Uneven cylinder return speeds may be controlled somewhat by allowing the slide to return at the slow speed.

14) Observe pressure gauge on the tonnage control valves for desired cushion pressure. If cushion action is spongy, further bleeding under pressure may be required.

15) If necessary, increase setting by turning knob on the die cushion tonnage control valves clock-wise approximately one turn.

16) Return the slide to top of stroke with the "Up" button.

NOTE: When it is desirable to have the cushion cylinders stay down for extended periods, the air pressure must be exhausted from the air/oil tank to prevent it from rising again.

CAUTION: The cushion cylinders should not be held down by merely closing the control valve because a slight leak in the valve might raise the cushions enough to cause the line to be ruptured or the pins to be bent.

5.8.1 DIE CUSHION NOMENCLATURE

A. Bolster
B. Pin Pad
C. Piston
D. Retainer
E. Rod Packing
F. Cylinder
G. Control Valve
H. Head Plate
I. Cylinder Support
J. Bleed Valve
K. Mounting Bolt
L. Opening
M. Pressure Pins
N. Pin Holes

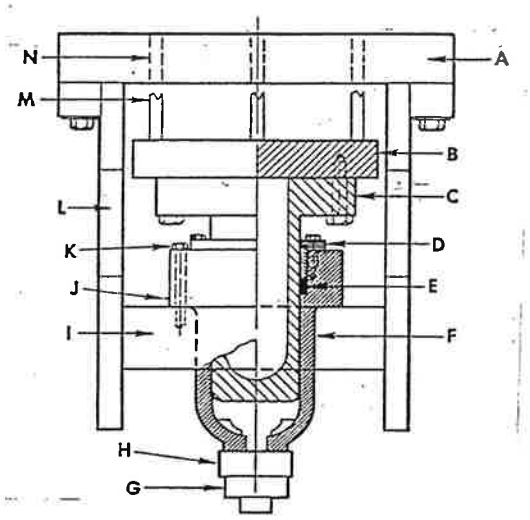

A. Nipple
B. Speed Control Muffler
C. Ball Valve
D. Pressure Gauge
E. Plug
F. Relief Valve
G. Speed Control Muffler
H. Level Gauge
I. Pressure Gauge
J. Relief Valve
K. Check Valve
L. Drain Cock
M. Tank

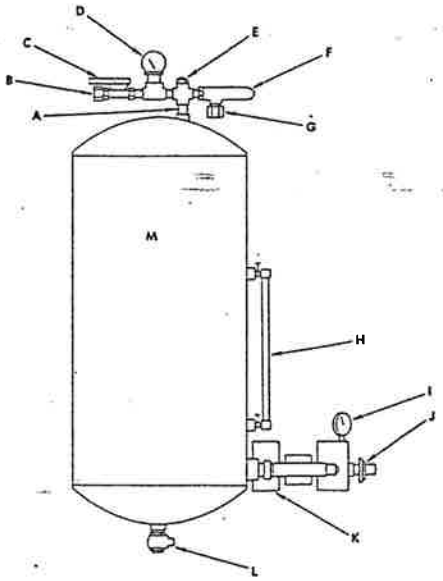

5.9.0 POWER UNIT PIPING CONNECTION

The piping between the press and the tank on the power unit is made up at the factory. The pipes and hoses have been properly fitted and bracketed. Check all hose and pipe connections, making sure they are tight. Visually inspect for any damage that may have occurred in shipment. In some cases the top cylinder pipe connections will be of a manifold type and there will be more than one hose connection.

The bottom of the cylinder hoses will connect to the Foot valve lines. In the case of larger machines, these lines may connect to one Foot valve and to one or more Up valves on the power unit end.

5.10.0 HYDRAULIC OIL

The quantity of oil required to initially fill the hydraulic system is shown on the "Outline Drawing". The oil used must be high quality, manufactured by a reputable petroleum supplier and suitable for the vane type hydraulic pump on the press.

OIL MUST MEET THESE REQUIREMENTS

1) A.P.I. Gravity: 28 Min.

2) Vickers Vane Pumps (high performance) 175 to 230 SSU at 100 degrees F.

   SSU Viscosity at cold start: 4000 SSU Max.

   SSU Viscosity at operating temperature: 60 SSU Min.

3) Viscosity Index: 95 Min.

4) Neutralization number (new oil): 1.0 Max.

5) ASTM-Oxidation Test: D-943-54 at 2500 Hrs. - 2.0 Max.

6) Government Emulsion Test: Minutes to 0 ML Emulsion - 10.

7) Must provide the high level of wear protection required in new generation hydraulic pumps.

8) Use of automotive MS type oil not recommended. Consult your oil supplier for sampling to determine condition of system oil and to establish oil change periods.

KEEP THE OIL CLEAN. All precautions should be taken to keep oil clean, free from chips, grit water, sludge, coolants, cutting oils, etc. Use a high quality oil, straining and filtering it carefully when filling the tank. Note that new oil from drums may already be contaminated.

5.11.0 ELECTRICAL CONNECTION & CHECKLIST

(Refer to Electrical Control Circuit Drawing)

1) Connect incoming electrical power to the press controls. Refer to the press data plate for the correct operating voltage and use ample wire size to insure a minimum voltage drop. Check for compliance with local codes.

2) Standard controls consist of a motor starter, main circuit breaker and control transformer all provided with overload and low voltage protection. All components have been test inspected and adjusted for performance at the factory

3) Visually inspect for any damage to relays or wiring that may have occurred in shipment. Check all control box and power unit wiring for loose connections.

5.12.0 GROUND CONNECTION

1) Check local codes and ground the press accordingly. The Ground Connected light has a separate ground point terminal located in the main control box. (This terminal is not intended for the main press ground). The press is supplied with a grounded control circuit. One side of the control transformer secondary is connected to ground and one side to all control operating coils and indicator lights (other than the Ground Connected light). All pilot contacts are connected to the ungrounded fused side of the circuit so that a ground fault will blow the fuse and prevent operation.

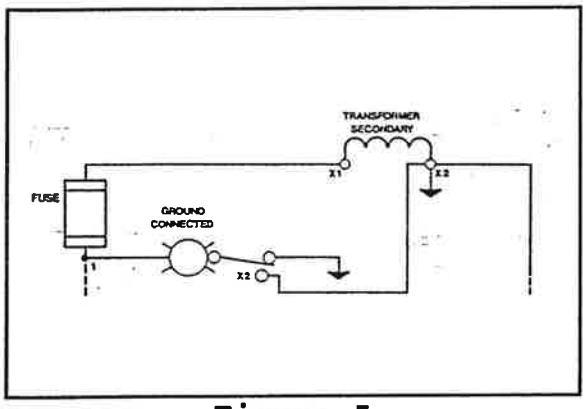

Figure 5
TRANSFORMER SECONDARY CONNECTED TO GROUND

Note: Figure 5 depicts ground circuit only. Refer to electrical diagram for comprehensive circuit information.

2) Check the lighted Ground Connected push button. The button should be lit at all times when power is on. If the push button is not lit but will light when depressed, one side of the control circuit is not grounded. If push button will not light even when depressed, refer to section 8.0.0 3 "Troubleshooting"

5.12.1 MOTOR CONNECTION

A magnetic starter which includes short circuit, overload and under voltage protection and a convenient circuit breaker or disconnect switch is mounted on the press.

Before starting the motor make the following checks:

1) Check the starter connections for correct operation. It is very important that the starting relay "drop out" when the stop button is depressed.

2) Check the motor wiring for proper grouping of the leads coming from the motor.

3) Make sure the motor is wired for proper voltage.

CAUTION: Do not run the motor or check direction of rotation until the tank has been filled with oil.

6.0.0

INITIAL START-UP

After completing all of the steps listed in Section 5.0.0 the press will be ready to start-up. It is very important that the initial start-up be followed in exact sequence if the press is to operate satisfactorily. The Initial Start-Up Must Always Be Made Under Supervisory Control.

6.1.0 START-UP PROCEDURE

1) Make sure you have read and have a complete understanding of the safety, control descriptions and operational instructions contained in this manual. Never experiment or operate the press without a thorough knowledge of these important instructions.

2) Visually inspect the press and the work area to assure they are free of obstructions or foreign objects that could hinder safe press operation.

3) If dies are in use, inspect them for proper installation and safe operating condition.

4) Check to be sure the Mode Selector Switch is in the Set-Up and Inch Mode.

5) Start the motor by pushing the motor start button. Bring the motor up to speed then stop and start several times.

6) With the motor running, depress the Run buttons and inch the

   slide up a few inches. Return the slide to its lower limit by operating the Up button.

7) Depress the Run buttons again and allow the slide to go to the top of the stroke and contact the closed limit switch. Return the slide to its open limit with the Up button.

8) Check condition of grease film on the slideways. Be sure they are adequately lubricated.

9) The slide should now be cycled 20 times (in the Inch Mode) for the full stroke. Check for any abnormal sounds during this period of operation.

10) Check the oil level in the power unit tank with the slide at the top of the stroke. Add more, if necessary, to the mark on the dipstick or indicator. Check for any oil leaks.

11) Following this, all air from beneath the piston should be removed by the following procedure:

    A. Move the micrometer depth stop to the top of the stroke adjustment scale.

    B. Set the Mode Selector Switch to Single Stroke/Manual Return.

6.2.0 SEQUENCE OF TESTING CONTROLS

6.2.1 CHECKING "INCH" MODE

1) Place the Mode Selector Switch in the "Inch" position.

2) Depress the "Run" buttons and the slide will move down. At any point in the advance stroke release the "Run" buttons and the slide should stop and hold position. Depress the "Run" buttons again and advance the slide to the bottom of the stroke.

3) When the bottom stroke setting is reached the slide should stop and remain at that position even if the "Run" buttons are held depressed or released.

4) Depress the "Up" button and the slide should return as long as the "Up" button is depressed. Release the "Up" button at any point in the return stroke and the slide should stop and hold position.

5) Continue depressing the "Up" button and return the slide to the top stroke setting.

6) "Inch-Up" or "Inch-Down" may be accomplished anywhere in the stroke setting range without the necessity of returning to the top setting.

   NOTE: Inching can be done only at the slowest speed and cannot be performed in Rapid Advance speed.

6.2.2 CHECK "SINGLE STROKE" MODE

1) Place the Mode Selector Switch in the "Single Stroke" position.

2) Depress and hold the "Run" buttons and the slide will move down until the bottom programmed setting is reached.

3) The slide will then automatically return to the top programmed setting and stop.

4) The slide will not stroke again unless both "Run" buttons are released and depressed again.

   NOTE: If one or both "Run" buttons are released during the downstroke before speed change, the slide will stop and hold position but will advance again if both "Run" buttons are released and depressed again.

   Releasing the "Run" buttons after speed change will have no affect on the slide. When the top programmed setting is actuated the slide will not advance again until both "Run" buttons are depressed again. The "Up" button may be used anywhere in the stroke range to return the slide to the top.

6.3.0 SHUTTING DOWN THE PRESS, WITH RAM SAFETY LOCKS

1) Return the slide to its top position.

2) Turn Mode Selector Switch to "Off". Turn cushion selector to "Off".

3) Stop the motor by pushing the motor stop button.

7.0.0

MAINTENANCE

7.1.0 LUBRICATION

Correct lubrication is of vital importance to the smooth trouble free performance of your Pacific press. Most of the moving parts of the press operate in oil. However, there are a few points that must be regularly serviced. A light grease film on the guides is desirable.

PERIODIC LUBRICATION MAINTENANCE

1) If specified in motor manual, grease the electric motor bearing yearly with suitable bearing grease.

7.2.0 AUTOMATIC CENTRALIZED LUBRICATION SYSTEM (Optional)

The Turcite slide surfaces of the press are designed for high pressure grease lubrication. The Centralized Lubrication System enables the slideways to be lubricated automatically from a single station.

7.3.0 REPLACING THE HYDRAULIC OIL

If the oil is to be replaced the tank should be cleaned. First, turn off all power to the press and disconnect all electricals and tubing to the top and bottom of the cylinders, then unfasten and raise the tank top so the entire surface of the tank can be cleaned, using clean, lint free rags. Replace the filter cartridge. Under normal operating conditions, it is not necessary to disassemble the valves, cylinder, pump or connecting pipes.

7.4.0 OPERATING TEMPERATURE

For maximum life the operating temperature of hydraulic oil should not exceed 160 degrees or go below 100 degrees F. If the temperature goes beyond this range for long periods of time a Pacific Oil Cooler or Heater should be installed. The particular duty cycle of the press will determine the operating temperature, along with the ambient air temperature and air movement.

7.5.0 OIL FILTRATION SYSTEM

Pacific presses are equipped with a separate filter mounted on the reservoir top for easy replacement of the throw-away type element. The unit filters the full flow of oil to 10 microns. The filter element is the corrugated fibre type equipped with a light spring to bypass the flow if the element should become plugged. It is recommended that the filter be checked each day before operation and replaced when dirty. An indicator gauge shows when replacement is necessary.

7.6.0 PUMP MAINTENANCE

High pressure hydraulic pumps are built with very close clearances. It is possible to completely ruin an expensive pump in a very few minutes merely by restarting a pump improperly. It is strongly urged that the pump manufacturer's instruction book be studied carefully before attempting any adjustment of the pump or before restarting any pump that has been repaired. Should there be any doubts about the details of any pump adjustment, or its repair, contact the pump manufacturer's serviceman or your Pacific dealer.

7.7.0 HYDRAULIC CIRCUIT

The hydraulic system of the press is a compact, high speed circuit consisting of a single motor mounted pump and valve stack. Consult your hydraulic and electrical drawing for detailed information.

7.8.0 VALVE ADJUSTMENT

It is our general experience that users of Pacific Hydraulic presses will have less trouble if they do not modify any valve adjustment. The entire operation of the press is dependent upon proper valve balancing, adjustments and settings. It is essential that personnel doing this work understand the entire operation of the press. Note that valve settings are sealed. If pressure relief valve settings are changed, the maximum tonnage may be exceeded and damage may result. Changed relief valve settings automatically void all warranties made by Pacific.

7.9.0 RELIEF PILOT VALVE

The Relief Pilot Valve is the normally-open solenoid type pilot valve that is mounted on the head of the high pressure relief valve. When this pilot is energized, the relief valve will close until its set pressure is reached.

7.10.0 PACIFIC RELIEF VALVES

The factory setting of the Relief Valves should not be changed.

Tampering with the adjustment of this valve will throw the hydraulic system out of balance. Relief Valve settings higher than specified will automatically void all factory warranties and can damage the press.

There are two possible sources of trouble with the Relief Valves. Foreign materials may prevent the pilot cone from seating or clog the orifice in the spool. It is also possible that the spool may stick. Any of these will result in erratic operation of the press. The entire pilot cone assembly as well as the valve head can be removed without effecting the adjustment of the valve.

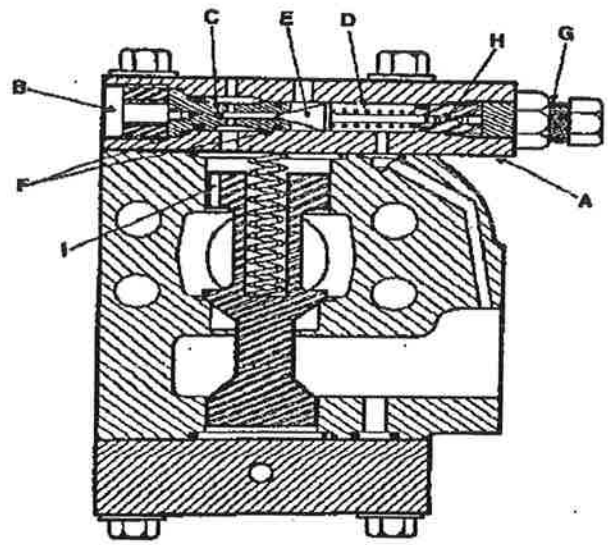

FIGURE 6
PACIFIC RELIEF VALVE

If it is necessary to disassemble the Relief Valve, proceed as follows:(Fig. 6).

1) Remove the valve head (A) and using a vice, place the valve head firmly in a vertical position with the adjusting screw assembly down (G). Do not clamp on machined surfaces.

2) Remove plug (B) opposite the adjusting screw. **DO NOT DISTURB ADJUSTING SCREW.**

3) Remove pilot cone seat (C) by inserting a 8-32 threaded screw into the tapped hole in the end of the pilot cone seat.

4) Turn the valve head upside down. Spring (D) and Pilot Cone (E) will drop out.

5) Thoroughly clean all parts, particularly pilot cone (E) pilot cone seat (C) and the orifice mainspool (I). Check O-Rings (F) and replace if defective.

6) To reassemble, replace the valve head in a vertical position with plug end up.

7) Replace spring (D) and pilot cone (E). **NOTE: Check alignment of the pilot cone with the guide (H).**

8) Replace pilot cone seat (C).

9) Remove the 8-32 screw and replace plug (B).

It should seldom be necessary to clean the lower head. However, if desired this may be done at this time.

NOTE: Be sure when replacing the valve head that the ports match. The correct position of the head on the body should be marked with a center punch before disassembly. A roll pin is provided for alignment. Be sure the pin is in place.

7.11.0 PACIFIC FOOT VALVES

The Foot Valves are similar to the Pacific Relief Valve. To inspect and clean the valve head proceed as follows:

1) Block the slide with safety blocks.

2) Proceed as outlined under "Relief Valves".

NOTE: It is important to replace the head in the same position. If the ports are not correctly matched, the valve will not function properly and the press may be damaged. We suggest that the position be marked with a center punch before disassembly.

If it is necessary to adjust this valve proceed as follows:

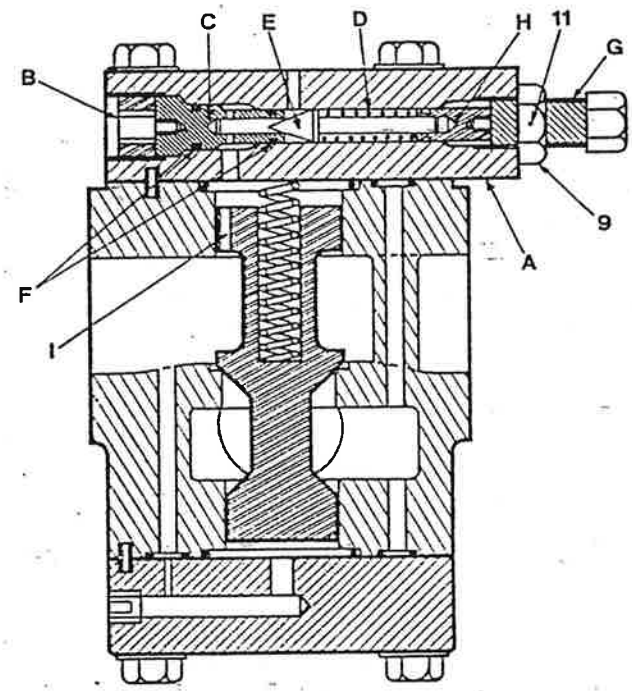

Figure 7
PACIFIC FOOT VALVE

1) Install an accurately calibrated pressure gauge at test station on top of cylinder or dump valve.

2) Run the slide up and down several times to bleed all air out of the system.

3) Run the slide down in "Normal Press" and note the pressure when the press is operating under no load. The reading should correspond to the recommended psi for foot valves found on the hydraulic drawings accompanying your machine. If the pressure is too high the available tonnage is reduced.

4) If it is necessary to adjust the valve, remove the safety wire #11. Loosen the lock nut #9 on the upper head and turn the adjusting screw clock-wise to raise the pressure or counterclockwise to lower the pressure.

5) Tighten the jam nut on both valves. Adjust the valve opposite the cylinder being checked, then take the final reading.

7.12.0 REPLACING ROD PACKING

The piston rod packing will keep the rod surface wiped practically dry. A very thin film of oil is desired. If the rod is too dry or if the packing squeals, the packing gland should be loosened slightly. However, if the packing tends to leak oil, it should be tightened.

CAUTION: When either loosening or tightening the gland care should be taken to see that the adjustment is uniform.

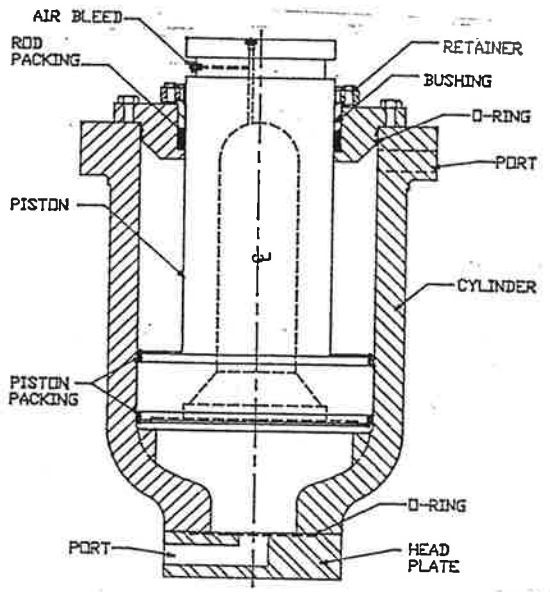

Figure 8
CYLINDER ASSEMBLY

The capscrews should be adjusted by quarter turn intervals (about 90 degrees) and the assembly checked for freedom from leaks. The space between the lower face of the cylinder head and the upper face of the packing gland should be equal within about 1/64". After several years it may become necessary to either add an extra ring to the rod packing or to replace the complete set of packing.

Proceed as follows:

1) Have a supervisor place the mode selector switch in the "Inch" position and run the bolster up to about 2" below the closed height position.

2) Using jacks, crane, or other means, support the bolster in position.

3) With the bolster securely supported, carefully remove the keepers from the piston/bolster connection.

4) Lower the piston to the bottom of its stroke.

5) Turn off all power to the press.

6) Remove the retainer capscrews and slide the retainer bushing up free from the piston rod.

7) If it is desired to add one ring to the existing packing, carefully extract the outside packing ring using a suitable sharp pointed tool; be careful not to damage the ring. Carefully manipulate the new packing ring over the rod. Now place the new ring and the outside ring into the lower cylinder head.

8) When the ring is snugly in place lower the bushing and retainer and replace the retainer capscrews. Give the new packing a preliminary adjustment sufficient to prevent gross leakage. Do not tighten excessively.

9) If it is desired to replace the entire packing, remove all of the old packing rings. Be careful not to score the rod. As each ring is extracted, take it off the rod. Manipulate the new packing rings down into the lower cylinder head. As each ring is moved into place it is necessary to drive it by tapping lightly

with a hard wood packing tool or a hammer. It may be necessary to relieve air in the lower cylinder head by sliding the rings down with a piece of smooth wire between the rings and the outside of the lower cylinder head. Be careful not to damage the edges of the rings.

10) Close the main disconnect

11) Have supervisor place Mode Selector Switch to "Inch".

12) Start motor.

13) Depress Run buttons.

14) Set the controls for "Set-Up" and "Inch".

15) Raise the piston by carefully inching the piston up to the bolster. Assemble the keepers on the piston.

16) Correctly adjust the gland and packing as mentioned above.

17) Inch the slide up and down through several cycles to insure all air has been removed from the system.

7.13.0 REPLACING PISTON PACKING

To replace the piston packing it will be necessary to remove the bolster and dies from the press prior to removing the piston from the cylinder.

Proceed as follows:

1) Have a supervisor place the Mode Selector Switch in "Set-Up", "Inch" mode, and advance the bolsters to their closed position with wood blocks or dies between bolsters.

2) Disconnect rack attached to the crown assembly, mark pinion and racks.

3) Remove pinion capscrew.

4) Lower bolsters & piston to disengage rack from crown. Remove pinion and racks from bolsters.

5) Disconnect transducer from lower bolster and manually retract rod to the closed position.

6) Remove gib assemblies from front/back of both bolsters.

7) Remove piston keepers.

8) Remove both bolsters from side opposite removed gib assemblies with fork truck.

9) extend piston until bottomed on lower head, after dismounting cam operator.

10) Turn off all power to the press.

11) Loosen cylinder head capscrews.

12) Remove piston, cylinder head & gland from cylinder.

13) Caution: An accumulation of hydraulic oil will drain off when the piston is removed from the cylinder.

14) Remove old packing, thoroughly lubricate new packing with hydraulic oil and install.

NOTE: The upper packing ring must be installed with the "U" up. The "U" must be down on the lower ring.

15) Lower the piston back into the cylinder, using extreme care not to damage the piston packing as they enter the cylinder. There is a slight taper at the

entrance to the cylinder bore to assist in entering the packing. Make certain that the assembly is clean and the cylinder walls in good condition. If there is any galling of the cylinder walls they should be honed.

16) Bolt the cylinder head to the cylinder.

17) Remove air from piston cavity with air bleed on piston.

18) Install bolster, rack assembly, gibbing and piston keepers.

19) Restart the press and check rack and bolster alignment.

20) Check gib clearance.

7.14.0 GIBBING ADJUSTMENT

Correct gibbing adjustment is an important factor in maintaining parallelism between the bottom of the slide and the top of the bed bolster. The gibs should be adjusted tight enough to permit a thin film of grease between the moving surfaces. If set too tight, the gibs will squeeze out the grease film and cause possible damage to the wear strips. Improperly adjusted gibs can result in unsatisfactory forming or blanking work.

With the correct adjustment and proper lubrication the parts of this assembly should show little or no wear. If adjustment is necessary, adjustable gibs are provided in the gib assembly to permit easy slide clearance adjustment. About .004" total clearance should be maintained between the slide and the gibs, however, this will be determined by the types of work being performed. Industry practice is, generally that tight gib adjustments are normally used for punching and blanking jobs and relatively loose adjustments for deep draw work.

When setting gibs, raise the slide to rest on 4 parallels of equal height, then adjust the back gibs first, front gibs last. Complete one gib adjustment before starting another.

TO CHECK GIBBING CLEARANCE

1) Determine gib clearance at the top and bottom of slide wear plates by inserting a feeler gauge between the face of the slideway and the slide wear-plates. About .004" clearance is recommended.

7.15.0 DIE CUSHION SERVICING (Optional)

Servicing the die cushion cylinder system warrants the same careful attention as you would give the power unit. Periodic maintenance and frequent visual inspections will assure the unit of consistent trouble-free performance.

WARNING: Always remove all air from the cushion system by proper bleeding before attempting any service procedure.

1) Check oil level in the accumulator tank frequently. If oil needs changing use a good hydraulic oil with a viscosity of about 135 - 165 SSU at 100 degrees F. This oil should have rust preventative, anti-oxidation and anti-foam additives.

2) Check accumulator tank periodically for proper air pressure. Recharge with clean dry air when needed. ASME code accumulator tanks are designed for 125 psi.

3) Check the pressure control valves frequently at the base of the cylinders to see if it is set for the work being performed.

4) Inspect and clean dirt, grime and metal particles from unused pressure pin holes and from around the piston. Make sure rod is clean and not scored and it is being lubricated with a light film of oil.

5) Periodically clean punchings, dirt and scale from pin pad.

6) Check piping system for leaks and damage.

7.16.0 PREVENTATIVE MAINTENANCE CHECK

In order to insure long and trouble-free service, the following maintenance check should be made every month. This will assist in locating minor troubles before they can cause breakdowns. If a breakdown does occur, carefully note the symptoms and refer to TROUBLESHOOTING section.

VISUALLY INSPECT THE PRESS.

1) Turn off all power to the press.

2) Inspect the Stroke Adjustment Assembly and travel limit switches as follows:

   A. Operate the Open Height limit switch and listen for a click. Check for cleanliness, especially for oil or water.

   B. Operate the Depth limit switch and listen for a click. Check for cleanliness, especially for oil or water.

   C. Check that open height and depth cam is in place.

   D. Tighten the mounting screws.

3) Check the following capscrews and nuts for wrench tightness.

   A. Cylinder capscrews

   B. Gibbing Assembly mounting.

   C. Piston capscrews.

   D. Side plate capscrews.

4) Disconnect primary power unit.

5) Open the electrical control box for a visual inspection. (Make certain that the power is off.)

WARNING: HIGH VOLTAGE MAY BE PRESENT EVEN WITH DISCONNECT OFF

   A. Check for cleanliness and freedom from oil. Any oil must be removed with a non-flammable solvent.

   B. Tighten all terminal screws.

   C. Check for burned out relay coil. This will be obvious from the odor.

   D. Disconnect primary power input first, then remove the arc chutes and inspect the contact points. Replace any that are badly burned. Tighten all contacts.

   E. Manually close the contacts to be sure they close and have good spring tension.

6) Visually inspect the power unit.

   A. Check the oil and the oil filter gauge for correct level and cleanliness. If there are any signs of the slightest amount of dirt in the oil, replace or filter it. If the oil is dirty the filter element should be changed.

B. Check for oil pools indicating bad leaks.

C. Check pressure setting for the jam nuts on the relief valves to make sure they are tight.

D. Loosen tank plug to check for water in the oil. Especially in high humidity areas this should be checked before each morning start up. Drain all water from the bottom of tank and tighten plug.

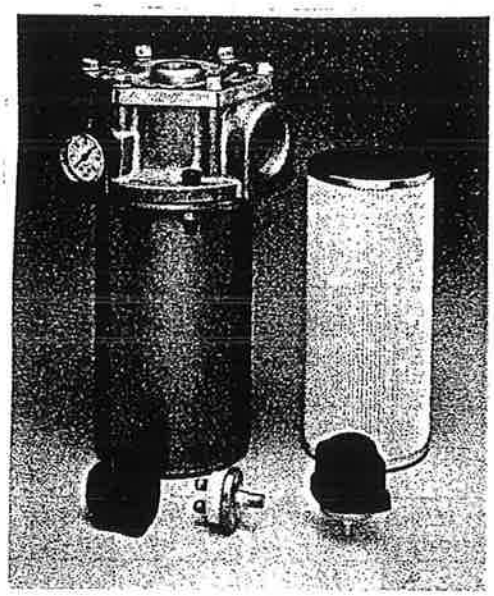

Figure 9
OIL FILTER

7.17.0 PERIODIC CLEANING

An essential part of good maintenance is machine cleanliness. Maintaining your press in a clean condition contributes to good workmanship, safer operating conditions and greater performance. By periodic cleaning the actual removal of dirt, grime, oil and grease can help in spotting items which may require corrective attention. Clean the machine with a good grade of safe commercial solvent and visually inspect for wear, loose bolts, bad wiring and loose covers. Check piping for leaks and damaged fittings. Reduce the damaging effects of dirt by keeping cover plates in place and by wiping up oil and grease spills as they occur.

After cleaning, loosen the drain plug at the bottom of the tank and let out any moisture which may have seeped into the tank during cleaning or due to condensation.

7.18.0 RECOMMENDED SPARE PARTS

1	Pilot Valve, Normally Open, 110/60 #6106879
1	Pilot Valve, Normally Closed, 110/60 #6106880
1	Coil for above, 110/60
2	Pilot Cone 04052-100 & 3/16" Seat 04051-100 (X) Assembly #5394301
2	Pilot Cone # 04052-100 & 1/4" Seat 04051-100 (Y) Assembly.
1	Pacific 1-1/4" Valve O-Ring Kit #54489-100
1	Rexroth board VT5006S1V #6118355
1	Rexroth board VT2000-S-4X/F #6117673
1	Power Supply Sola 83-24-260-2 #6116316
2	Contact Block SQ'D' 9001-DA01 #6116659
2	Light SQ'D' D1Y1BSC01M05 #6118419
2	Lamp SQ'D' 9001-Z32A #6111764
2	Light Mod SQ'D' 9001-DFSN11 #6115818
2	Pushbutton SQ'D' 9001-D1Y1W #6116655
2	Contact Block SQ'D' 9001-DA20 #6116661
2	Relay SQ'D' 8501-C06V20 #6101741
2	Fuse Buss KTK-R-6 #6111140
2	Buss MDA 10 #6117637
4	Littlefuse KLDR 3-1/2 #6116576
4	Buss FNQ-R-2 #6116950
4	Buss LPS-RK-20 #6118415
4	Buss LPS-RK-40 #6118416
2	Overload Rel. SQ'D' 9065 TD 0.8 #6115813
2	Overload Rel. SQ'D' 9065 TE 11.5 #6115785
2	Overload Rel. SQ'D' 9065 TF 22 #6115730
2	Auxiliary cont. SQ'D' 9999 PX20 #6117732
1	Rex. Prop. Valve 4WRE #6118315
1	Rex. Prop. Valve DBEMT #6118414
1	Dir Valve #6106879
1	Trans. SQ'D' 9022PTB-35B33S #6117741
6	O-Rings #6100378
3	Filter Element #6106598
6	O-Ring Kits #5452400

8.0.0
TROUBLESHOOTING

The following table is included as a convenience in readily locating the source of most operating difficulties. It is organized by symptoms observable from work quality or obvious malfunction with possible causes and remedies. You should familiarize yourself with all press components and functions as listed in the previous sections before attempting to troubleshoot any press malfunction. Before referring to "Troubleshooting" be sure to observe the press action or malfunction very carefully. In many cases, performance problems are not due to the malfunction of the press but to other related factors such as metal hardness, design, condition, and placement of dies, or to the very nature of the work being performed. Usually, if enough is known about a condition, it largely ceases to exist as a problem and merely becomes a maintenance procedure.

PROBLEM	INITIAL PROCEDURES	POSSIBLE CAUSES (SOLUTIONS)
1. Main motor fails to start	A) Make sure mode selector is in proper mode.	A) Mode selector in wrong position (turn to "Inch" mode).
	B) Check fuses.	B) Blown fuse (replace).
	C) Check to see that main power is on.	C) Main Disconnects open (reset).
	D) Filter motor stalled.	D) Filter clogged (replace).
		E) Starter heaters kicked out (reset and check for source of motor over-load).
		F) Starter button defective (replace).
		G) 110 volt disconnect open (check all switches).
		H) Defective starter coils (replace).
		I) Burned out transformer.
		J) Open Emergency stop (replace).
		K) Circuit breaker cover not closed (close cover and turn hand to "On" position).

PROBLEM	INITIAL PROCEDURES	POSSIBLE CAUSES (SOLUTIONS)
2. Motor stalls under load.	A) Make sure press has adequate power. B) Check motor for damage.	A) Low voltage condition (provide increased power to press). B) Weak or burned motor (contact motor manufacturer's representative for motor check). C) Loose or broke wires (repair).
3. Ground light (white) does not light.	A) Push to test light. Bulb lights. B) Bulb does not light.	A) Press is not properly grounded (refer to section 4.12.0) B) Bulb burned out (replace). C) Blown fuse (replace). D) Main circuit breaker off (turn breaker on). E) Defective ground test (1PB) (replace).
4. Slide will not stop during up stroke.	A) Check for loose or broken wires or terminals on limit switches and relays (test wires with test lamp if necessary using certified Pacific Circuit drawings). B) Check microswitches. C) Check inside junction boxes for broken or greasy connections.	A) Loose or broken wire(s) (replace). B) Defective depth limit microswitches (replace). C) Poor or broken contacts in junction boxes (repair or replace). D) Welded upstroke relay contact (replace contacts and springs). E) Defective 1CR or armature binding (remove cause of binding).

PROBLEM	INITIAL PROCEDURES	POSSIBLE CAUSES (SOLUTIONS)
5. Slide will not advance or return-motor is running.	A) Check control power. B) Inspect for loose or broken wires in switch and fuses. C) Check run buttons. D) Check relay coil.	A) Control power is not "On" (turn on). B) Defective switch and/or fuses (repair or replace). C) Switches inoperative (check switch and look for loose terminal or broken wire). D) Defective Control Master Relay (repair or replace). E) Defective upper or lower limit microswitches (replace). F) Defective relay (replace, also check armature for binding and check for loose or broken wires or terminals).
6. Incorrect speed or will not change speed.		A) Speed change cam not positioned correctly (reset to proper position).
I. Will not go into rapid advance speed.	A) Check position of speed change cam.	B) Defective speed change microswitch (replace). C) Foot pilot valve does not close when energized (repair or replace). D) Defective advance selector switch (replace). E) Loose or broken wires (repair or replace).
II. Will not go into normal press speed.	A) Check position of speed change cam.	A) Speed change cam not positioned correctly (reset to proper position). B) Defective two-up pilot (replace). C) Defective Foot pilot (repair). D) Short circuit in speed change microswitch (replace). E) Defective Rapid Advance Solenoids (replace).

PROBLEM	INITIAL PROCEDURES	POSSIBLE CAUSES (SOLUTIONS)
7. Insufficient tonnage	A) Check Tonnage Control Device. B) Check load position. C) Check Tonnage Control valve.	A) Tonnage Control not set properly or gauge broken (replace or reset Tonnage Control). B) Load not centered (center load). C) Malfunction with Tonnage Control Valve (check settings and "O" rings for leakage and replace as required).
8. Oil leaks.	A) Check "O" Ring seal.	A) Defective "O" Ring (replace with exact duplicate). B) Cylinder packing gland not seated properly (be sure that capscrews are tightened uniformly. Be sure that retainer and cylinder head are parallel. A thin film of oil should be on the piston rod, but not leaking. Check spacers where necessary).
9. Galling or binding in gibbing.	A) Check foundation.	A) Foundation settling (inspect press alignment and center distance as outline in section 4.0.0 & 5.0.0). B) Inadequate lubrication (lubricate as recommended in section 6.14.0). C) Accumulated dirt or other foreign matter in slide assemblies, (remove parts and wash, remove any galling with stone, and lubricate as recommended).
10. Unusual noise.	A) Check pumps. B) Check cylinders. C) Check oil level.	A) Possible air leak in pump seals (replace). B) Rod packing excessively tight (adjust properly). C) Low oil level (replenish to proper level). D) Loose intake pipe (tighten).

PROBLEM	INITIAL PROCEDURES	POSSIBLE CAUSES (SOLUTIONS)
11. Variation in forming from piece to piece.	A) Check die set. B) Check tonnage control. C) Check high pressure relief valve.	A) Poor design or misalignment of die set (properly adjust or replace). B) Tonnage control set too low (set high enough to actuate depth stop). C) High pressure relief valve sticking (clean or replace). D) Air in cylinders (replenish oil to proper level, replace worn pump shaft or head seals, tighten or replace loose or broken pump intake pipe). NOTE: After source of air leak is corrected remove air from cylinder by repeated short stroking at the bottom of the stroke. E) Defective depth microswitch (replace). F) Relief valve pilot sticking (replace). Level valve stem binding (repair cause of binding or replace).
12. Bed Bolster will not stay parallel with Crown Bolster.	A) Check Load Alignment. B) Check Foot Valve. C) Check one-up (Rapid Advance) valve.	A) Center the load between the cylinders and compensate for off-center loads with level control adjustment. B) Foot Valve not set equally (adjust valve setting to be equal within 10-20 psi). C) Valve may be leaking on leading side (clean valve).

9.0.0

ELECTRICAL & HYDRAULIC CIRCUITS

EATON | Vickers

The Systemic Approach to Contamination Control

A Complete Guide for Maximum System Performance

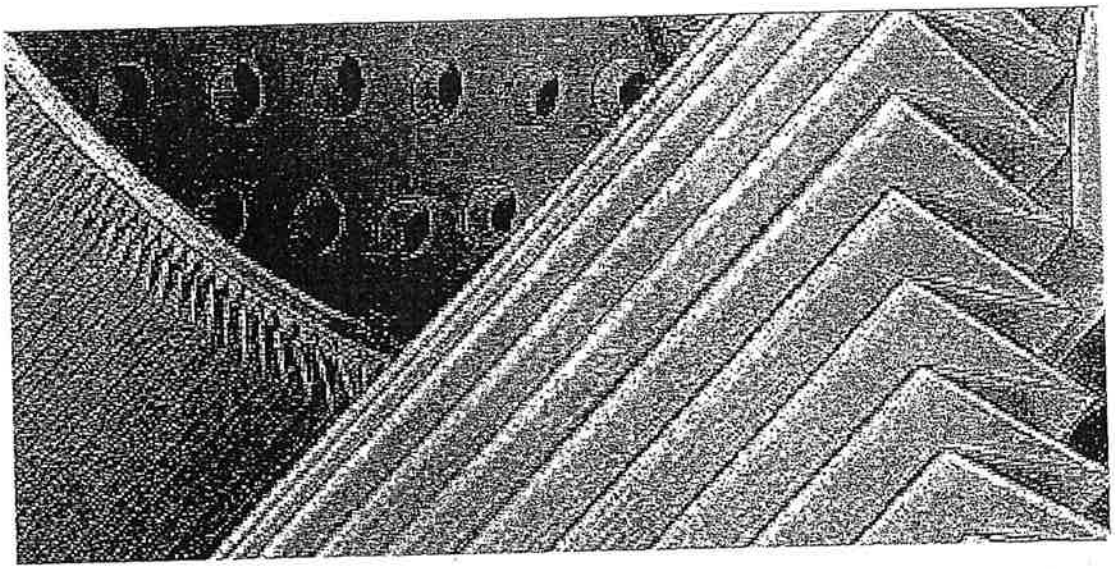

Vickers Guide to Systemic Contamination Control

Contents

Vickers Systemic Contamination Control

Fluid Power is one of the most reliable and repeatable forms of power and motion control. All that is required is comprehensive state-of-the-art system design and modern systemic contamination control. When problems are encountered, 80% of the time they are related to inadequate contamination control practices. Understanding this handbook will greatly assist the design or maintenance engineer in achieving the balanced system cleanliness that is the cornerstone of fluid power reliability.

Vickers has a more than 75-year history of dedication to helping engineers develop, operate and maintain reliable, high quality power and motion control systems. This guide is only part of the package Vickers offers to enable the designer and user to achieve the most effective hydraulic power and motion control.

Introduction

For a hydraulic or oil lubricated machine, the development of a target cleanliness level and the plan to achieve it is as much a part of system design as the selection of the pump, valves, actuators or bearings. Unfortunately, when some system designers select a filter, they look no further than a filter manufacturer's catalog, with little regard for the particular system's total requirements. Proper selection and placement of contamination control devices in a system to attain the targeted cleanliness eliminates (the root cause of) up to 80% of hydraulic system failures. Additionally, the system cleanliness approach assures the user of the hydraulic system a cost-effective approach to contamination control that allows the price of the filters and elements to be quickly recovered by the savings of improved performance, increased component life, increased oil life, increased uptime and fewer repairs.

To stress the interacting relationship between component design, system design, filter performance and filter placement, Vickers has named our approach to filters and filtration Vickers Systemic* Contamination Control. This book is dedicated to defining the theory and practice of quality, cost-effective systemic contamination control.

***systemic** (sĭ-stĕm'ĭk) adj.

1. Of or pertaining to a system or systems.

(American Heritage Dictionary, Houghton Mifflin Company.)

The Systemic Approach To Contamination Control

Working toward the most effective protection consistent with economy, we must first define our goal. In systemic contamination control the goal is always the same: to clean the fluid to the point that contamination is not a factor in the failure (catastrophic, intermittent, or degradation) of any component in the system during the desired useful life of that system. The first step towards this goal is the setting of a target cleanliness level that takes into account the specific needs of the system.

Once the target has been set, the next step is to select and position filters in the system so that the target can be achieved in a cost effective manner. This requires an understanding of filter performance, circuit dynamics and filter placement. While all three factors are important, the last two issues — circuit dynamics and filter placement — often receive much less attention than they require.

Today there are several sources for high efficiency filters that can initially keep the hydraulic or lubrication fluids clean. In most systems that have contamination problems, the cause is either poorly conceived filter placement, because of a lack of understanding of the dynamics of fluid flow, or the inability of the filter elements to maintain their performance levels throughout their service life in the system. The engineering guidelines needed to deal with both filter placement and system dynamics are presented in this document.

After the machine is in operation, the last and ongoing step is to confirm that the target cleanliness level is being maintained. This is most often accomplished by sending a fluid sample to a particle counting laboratory that gives cleanliness code data to established standards. If the target is being met, the system only needs to have filters maintained and the fluid retested periodically. If the cleanliness target is not being achieved, corrective actions need to be taken. Sometimes a change in maintenance practices is needed, but at other times a shift to a finer grade of filter elements or additional filter housings may be needed. Intelligent consideration of contamination control during the design phase is the best way to avoid both short- and long-term problems and gain the assurance that each hydraulically powered or oil lubricated machine will give long, reliable service.

Vickers Systemic Approach to Contamination Control

- Set a target Cleanliness Level
- Select filters and filter placements to achieve target
- Sample fluid and confirm achievement

Quantifying Fluid Cleanliness

The first step in setting a target cleanliness level is to understand that "cleanliness" is not a general term but rather a specific quantitative value. The current international standard for cleanliness of a hydraulic or lubricating fluid is defined by ISO 4406. Using an approved laboratory particle counting procedure, the number and size (in micrometers) of solid particles in a milliliter of fluid is determined.

Typical data from a hydraulic fluid sample counted by an automatic particle counter is:

Particles Size 'X' in Micrometers	Number of particles greater than 'X' size, in one ml of test fluid
2µm	5120
5µm	89
10µm	43
15µm	22
25µm	3
50µm	.4

(Note: Particle counts are normally run on 10 to 100 milliliters of fluid and then factored to report results for 1 milliliter. This is the reason results of fractional particles can be reported.)

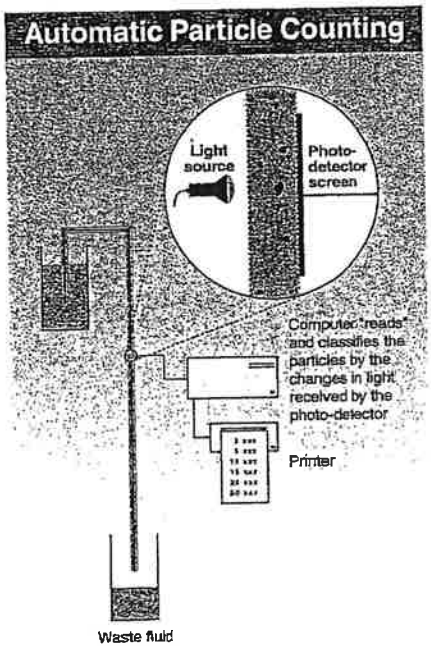

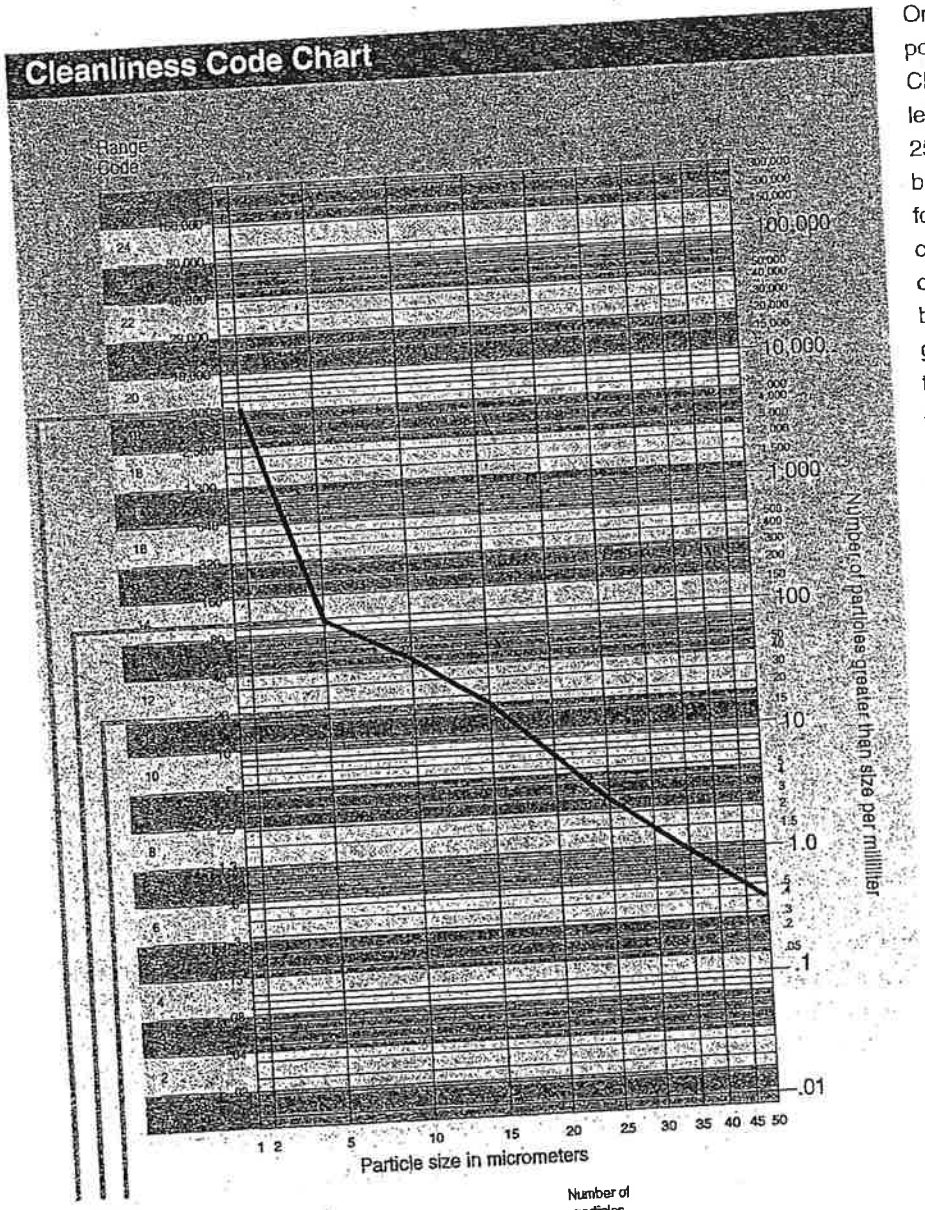

20/14/12
Cleanliness Code

Example

Particle size "X" in micrometer	Number of particles greater than "X" size in one ml of test fluid	Range code
2	5120	20
5	89	14
10	43	X
15	22	12
25	3	X
50	.4	X

Once the results are obtained, the points are plotted on a Cleanliness Chart. This chart has range codes (far left edge) that give a number, 0 through 25, that corresponds to a specific number of particles. Taking the range code for the number of 5µm and larger particles and the range code for the number of 15µm and larger particles and combining them together with a slash (/) gives us the ISO Cleanliness Code for that fluid. For the particle count in the example, the 89 particles of 5µm and larger size are in the 14 range and the 22 particles of 15µm and larger is in the 12 range. This means the example fluid is described as a **ISO 14/12** cleanliness fluid.

Unfortunately, the current ISO standard does have a weakness in that it can mask a significant build-up of very fine silt sized particles by the non-reporting of the counts smaller than 5µm. To remedy this, Vickers has adopted, and ISO is considering, expanding the code to three ranges correlating to 2µm, 5µm and 15µm. For the example presented, the Cleanliness Code becomes 20/**14/12**. Throughout this Vickers document we will show cleanliness codes with 3 ranges, the last two being bold type to signify that they are the current ISO standard.

Sources of Contamination

There are four primary sources for solid contamination to enter a hydraulic fluid. They are: contaminated new oil, built-in contamination, ingressed contamination and internally-generated contamination. Each of these sources needs to be understood as each is a major consideration in filter placement.

Sources of Contamination
- Contaminated New Oil
- Built-in Contamination
- Ingressed Contamination
- Internally Generated Contamination

Contaminated New Oil

Although hydraulic and lubrication fluids are refined and blended under relatively clean conditions, the fluid travels through many hoses and pipes before it is stored in drums or in a bulk tank at the user's facility. At this point, the fluid is no longer clean as the fluid lines it has traveled through have contributed metal and rubber particles, and the drums have added flakes of metal or scale. Storage tanks are a real problem because water condenses in them causing rust particles. Contamination from the atmosphere can also find its way into the tank unless satisfactory air breathers are fitted.

If the fluid is stored under reasonable conditions, the principal contaminants on delivery to the machine will be metal, silica and fibers. With fluids from reputable suppliers, sampling has shown typical Cleanliness Levels of 17/16/14 or dirtier. Using a portable transfer cart fitted with a high efficiency filter, contamination should be removed from new fluids before the contamination enters and damages the components in the system.

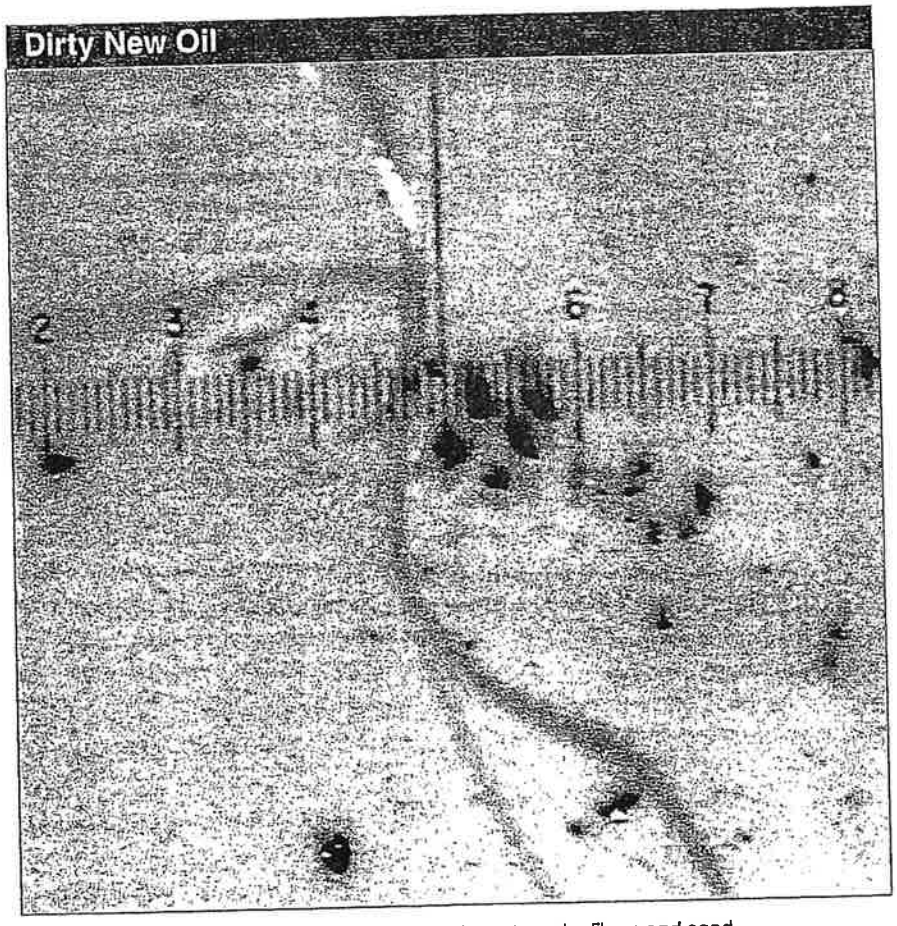

Contamination particles found in new fluid include rust, scale, fibers and sand (photomicrograph at 100x).

Sources of Ingressed Contamination

- Reservoir Vent Ports
- Power Unit Access Plates
- Maintenance Events
- Cylinder Rod Seals

Built-in Contamination

New machinery always contains a certain amount of built-in contamination. Care in system assembly and in new component flushing reduces this but never eliminates it. Typical built-in contaminants are burrs, chips, flash, dirt, dust, fiber, sand, moisture, pipe sealant, weld splatter, paint and flushing solution.

The amount of contamination removed during the system flush depends not only on the effectiveness of the filters used, but also the temperature, viscosity, velocity and "turbulence" of the flushing fluid. Unless high velocities and turbulence are attained, much of the contamination will not be dislodged until the system is in operation, with catastrophic component failure a possible result. Irrespective of the standard of flushing executed by the machine builder, an off-load period of "running-in" should be regarded as essential for any new or rebuilt hydraulic or lubrication system.

Ingressed Contamination

Contamination from the immediate surroundings can be ingressed into the fluid power or lubrication system. On large installations, such as those within steelworks or automotive plants, it is relatively easy to know the environmental conditions, though they vary considerably. For example, a coke oven system operates in conditions very different from a similar system in a cold mill. For mobile equipment, there is a very wide variation in environmental conditions by application, location and even by weather conditions (i.e. high winds).

The key is to severely limit the access environmental contamination has to enter the hydraulic or lubrication system. There are four major ways dirt can enter a system: reservoir vent ports (breathers), power unit or system access plates, components left open during maintenance and cylinder seals.

Sources of Ingressed Contamination

RESERVOIR VENT PORTS allow air exchange into and out of the reservoir to compensate for changes in fluid level caused primarily by cycling cylinders and thermal expansion and contraction of the fluid. All vents that exchange air need to be fitted with barrier-type air breather filters. Other acceptable options are to use bladders or flexible rubber barriers to prevent the exchanged air from coming in contact with the surface of the system fluid or valving which prevents air changes while allowing relief protection against over-pressurizing the reservoir.

POWER UNIT ACCESS PLATES — In some plants it cannot be assumed that access plates will always be replaced, though this problem is not as common as it once was. Good systemic contamination control requires that reservoirs are designed to remain sealed during operation and any access plates that need to be removed during maintenance be easy to reinstall. The most important factor in this aspect of contamination control is the proper education of all maintenance and service personnel.

INGRESSION DURING MAINTENANCE Whenever a system is opened for maintenance, there is an opportunity fo environmental contamination to enter the system. All possible care should be taken to ensure that open ports are kep covered or plugged, and component disassembly and rework is done in an area that is protected from excessive airborne dirt and contamination.

Lint free rags and oil absorbent materials in "socks" (rather than loose glandular form) should be used for component wipedown and area clean up.

CYLINDER SEAL INGRESSION — Rod wiper seals rarely are designed to be 100% effective in removing the thin oil film and the fine contamination from the cylinder rod. Environmental dirt that sticks to an extended rod is drawn back into the cylinder and washed off into the system fluid. Every effort should be made during machine design to avoid dirt or other contaminants from landing directly on extended cylinder rods. When this is unavoidable, the filters should be positioned and sized to capture this abundance of dirt.

Generated Contamination

The most dangerous contamination to a system is the contamination generated by the system itself. These particles are "work hardened" to a greater hardness than the surface from which they came, and are very aggressive in causing further wear in the system. In a system running on properly cleaned fluid very few particles are generated, although all components (especially pumps) create a small amount of particles during routine operation. In a system where these particles are not quickly captured the elevated contamination levels will cause the number of additional generated particles to increase at a highly accelerated rate! The best way to prevent contamination generation within a system is to start with a clean (fully flushed) system and keep the system fluid clean.

Generated Contamination

Abrasive Wear — Hard particles bridging two moving surfaces, scraping one or both.

Adhesive Wear — Loss of oil film allows metal to metal contact between moving surfaces.

Fatigue Wear — Particles bridging a clearance cause a surface stress riser or microcrack that expands into a spall due to repeated stressing of the damaged area.

Erosive Wear — Fine particles in a high speed stream of fluid eat away a metering edge or critical surface.

Cavitation Wear — Restricted inlet flow to pump causes fluid voids that implode causing shocks that break away critical surface material.

Aeration Wear — Air bubbles in the fluid implode breaking away surface material.

Corrosive Wear — Water or chemical contamination in the fluid causes rust or a chemical reaction that degrades a surface.

Sources of Contamination

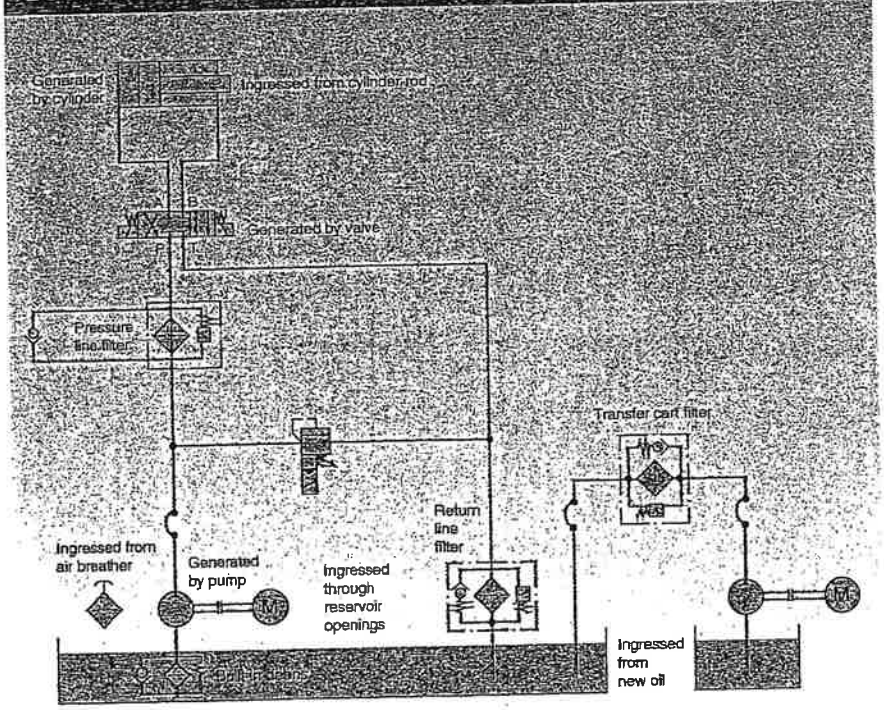

Note: Suction strainers with bypass are shown as an option in many examples in this book. See page 24 for a discussion on their application.

Damage Caused by Contamination

Types of Failures
- Catastrophic Failure
- Intermittent Failure
- Degradation Failure

Contaminant particles come in all shapes and sizes and are made up of a wide variety of materials. The majority are abrasive, so when they interact with surfaces they plough and cut fragments from critical surfaces in the components. This abrasive wear and surface fatigue accounts for almost 90% of degradation failures.

Types of Failures

Failures arising from contamination fall into three categories:

1. CATASTROPHIC FAILURE occurs when a large particle enters a pump or valve. For instance, if a particle causes a vane to jam in a rotor slot, the result may well be complete seizure of the pump or motor. In a spool type valve, a large particle trapped at the wrong place can stop a spool from closing completely. Another example of catastrophic failure occurs when the pilot orifice of a valve is blocked by a large particle. Fine particles can also cause catastrophic failure; a valve, for example, can fail to operate due to silting.

2. INTERMITTENT FAILURE can be caused by contamination on the seat of a poppet valve which prevents it from reseating properly. If the seat is too hard to allow the particle to be embedded into it, the particle may be washed away when the valve is opened again. Later, another particle may again prevent complete reclosure and be washed away. Thus, a very annoying type of intermittent failure occurs.

3. DEGRADATION FAILURE can be the result of abrasive wear, corrosion, cavitation, aeration, erosion or surface fatigue. Each one causes increased internal leakage in the system components which reduces its efficiency or accuracy, but these changes are initially difficult to detect. The eventual result, particularly with pumps, is likely to be catastrophic failure. The particles most likely to cause wear are clearance-size particles which just bridge the critical clearances between moving surfaces in the component. Oil also suffers degradation due to the presence of excessive contamination.

Sizes of Critical Clearances

Manufacturing clearances within hydraulic components can be divided into two principal zones, i.e. up to 5 micrometers for high pressure components and up to 20 micrometers for lower pressure components. The actual operating clearances for a component are set by the type of component and operating conditions it sees. These clearances help to define the cleanliness of the fluid required by that component.

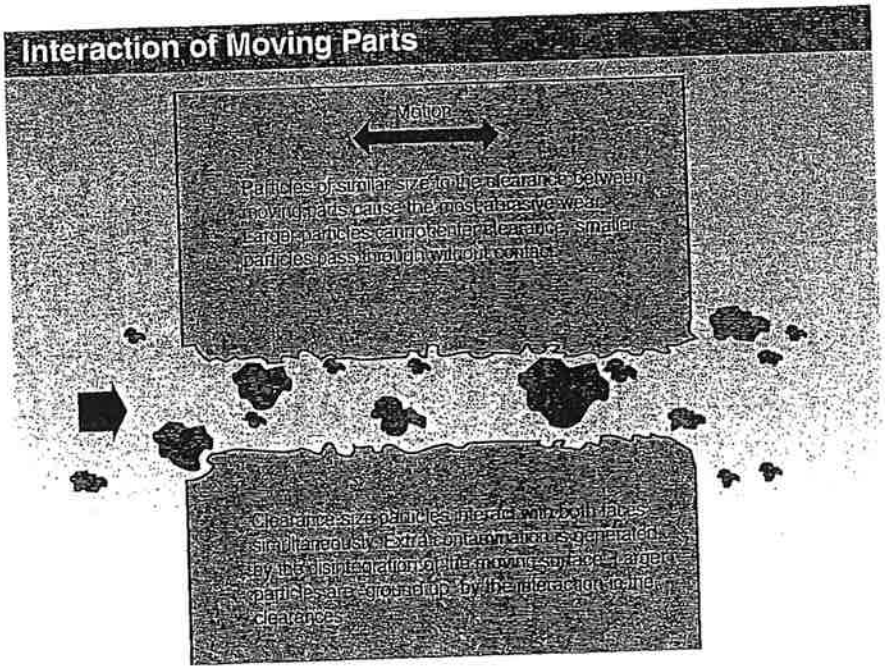

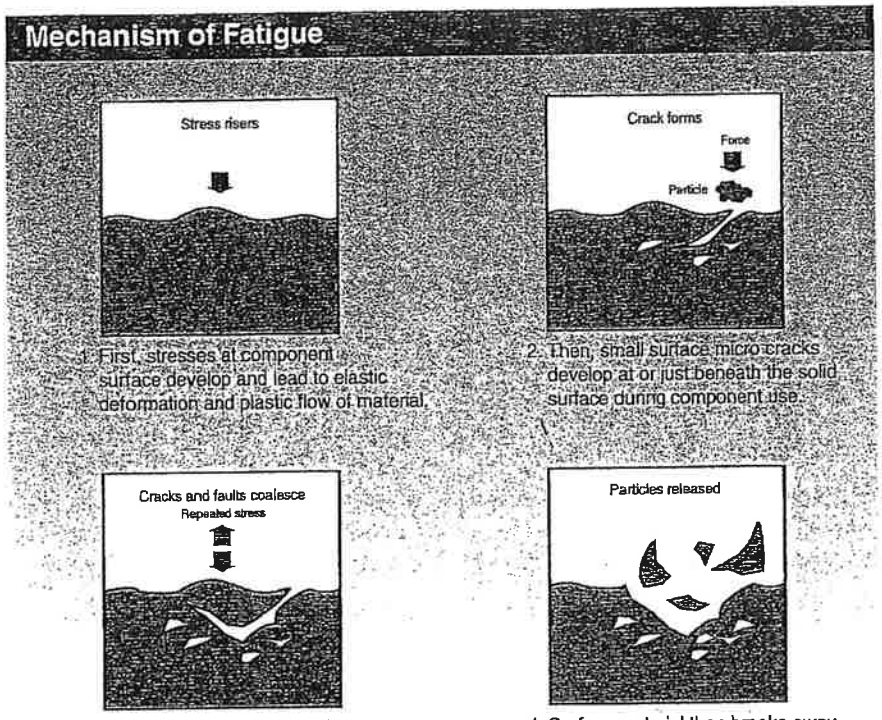

1. First, stresses at component surface develop and lead to elastic deformation and plastic flow of material.

2. Then, small surface micro cracks develop at or just beneath the solid surface during component use.

3. The faults then join to form larger voids undermining component surface.

4. Surface material then breaks away.

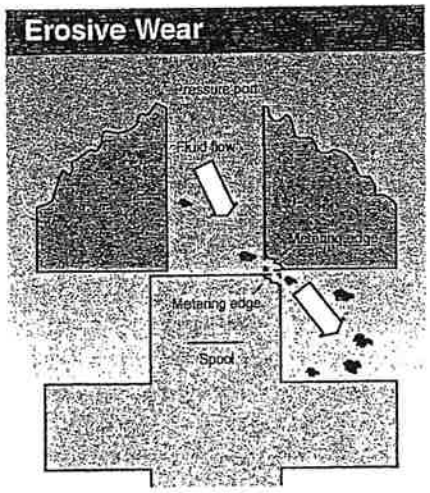

The metering edge of the spool and valve land has been eroded away by the particles in the high velocity fluid flowing through the valve.

Pumps

All hydraulic pumps have component parts which move relative to one another, separated by a small oil filled clearance. Generally these components are loaded toward each other by forces related to area and system pressure.

Since the life of most pumps is determined by a very small quantity of material being removed from a few surfaces, it follows that rapid degradation and eventual seizure will occur if the fluid within the clearance is heavily contaminated. The design of low pressure units permits relatively large clearances and typically only larger (10μm and larger) contamination has a significant damaging effect. Also at the lower pressure, there is less force available to drive particles into critical clearances. Increasing or pulsating the pump pressure is of major significance in determining the effect of contamination on a pump.

Another factor affecting clearances is the oil film thickness, which is also related to fluid viscosity (film strength). An optimum viscosity value is used during design. The oil should provide good film thickness to support loads hydrodynamically, and also be thin enough to allow adequate filling of the pump without cavitation. It is generally found in practice that critical clearances are larger where higher viscosities are used, and for this reason the maximum viscosity which is compatible with the inlet conditions should be chosen. Similarly, good fluid temperature control is beneficial in this respect.

Critical Clearances in a Vane Pump

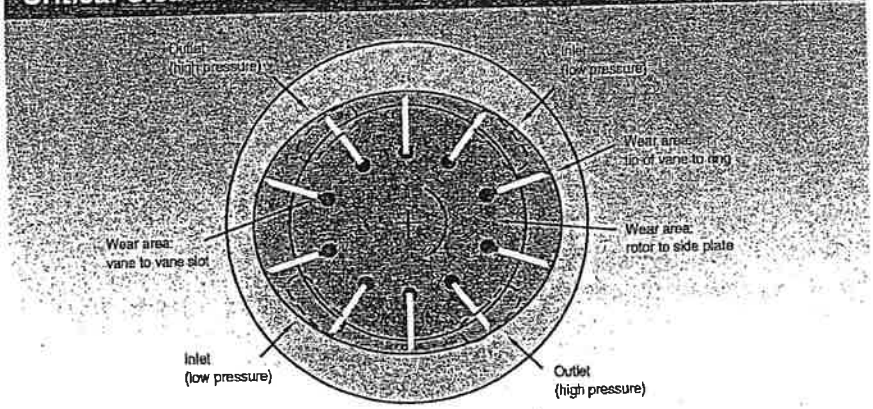

Critical Clearances in a Gear Pump

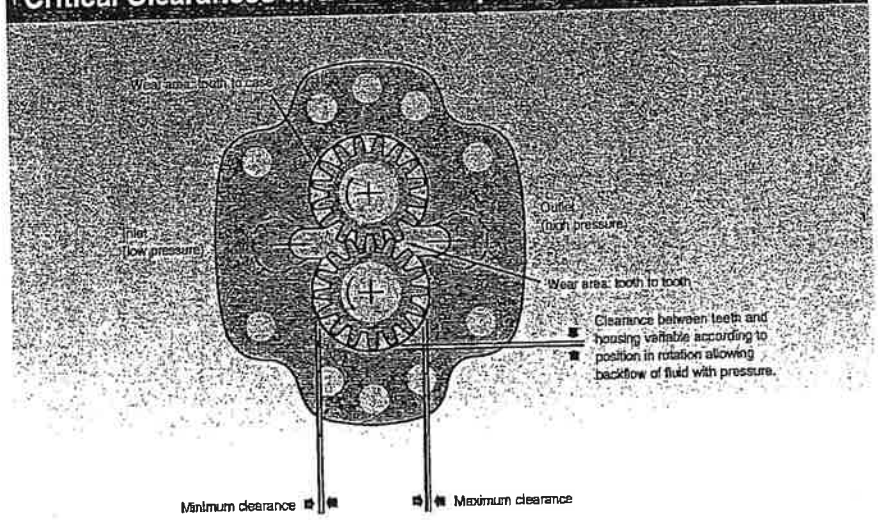

The areas in pumps particularly subj to critical clearance wear problems a

- Vane pump – Vane tip to cam ring rotor to side plate, vane to vane sl
- Gear pump – Tooth to housing, ge to side plate, tooth to tooth.
- Axial piston pump – Shoe to swas plate, cylinder block to valve plate, piston to cylinder block.

In many of these cases, the clearanc are effectively self-adjusting under operating conditions, i.e. with increa pressure clearances becoming smal Under adverse conditions, and partic larly where there is shock loading, th is an increased vulnerability to small sized contamination particles. Even where clearances are nominally fixe components under high loads may ti up eccentric positions which again n them vulnerable to smaller particles.

From engineering data and field exp ence, Vickers has set recommendec contamination levels which, if achiev will result in an increased life for mo systems and components. These ar presented in the next section, which with setting target cleanliness levels

The useful life of a pump ends wher no longer delivers the required outp at a given shaft speed. All too often, degradation goes undetected until fi catastrophic failure occurs, with vas quantities of contamination being rele into the system. Following such a fa the life of the replacement pump will be greatly reduced if the system is r properly cleaned or protected.

To the end user, total cost is the mo important issue; the failure of a low- pump may well result in expensive downtime and maintenance. If, by th inclusion of the proper contaminatio control devices, such a failure can b avoided, the initial investment in suc devices is fully recovered.

Motors

What has been written about pumps applies generally to motors because of their similar design. It must be remembered that a majority of the contaminant passing through the pump will also reach the motor where it will cause a similar performance degradation. If, for example, due to wear, the volumetric efficiency of the pump falls to 85% of its original value and the volumetric efficiency of the motor falls to 90% of original, then the overall volumetric efficiency of the pump and motor will drop to 0.85 x 0.9 = 76.5% of the original value.

Hydrostatic Transmission

Hydrostatic transmissions most often consist of a servo controlled pump and a fixed volume motor. Wear to a critical surface in any component will degrade the overall performance of the transmission. Failure of a component can spread debris throughout the system causing extensive and expensive secondary damage. High efficiency filtration is a key factor in achieving long, reliable service from a closed loop hydrostatic transmission.

Directional Valves

In most directional valves, the radial clearance specified between bore and spool is between 4 to 13 micrometers. As is well known, the production of perfectly round and straight bores is exceptionally difficult, so it is unlikely that any spool will lie exactly central in the clearance band. In a CETOP 3 valve, a spool is likely to have less than 2.5 micrometers clearance.

Critical Clearances in an Axial Piston Pump

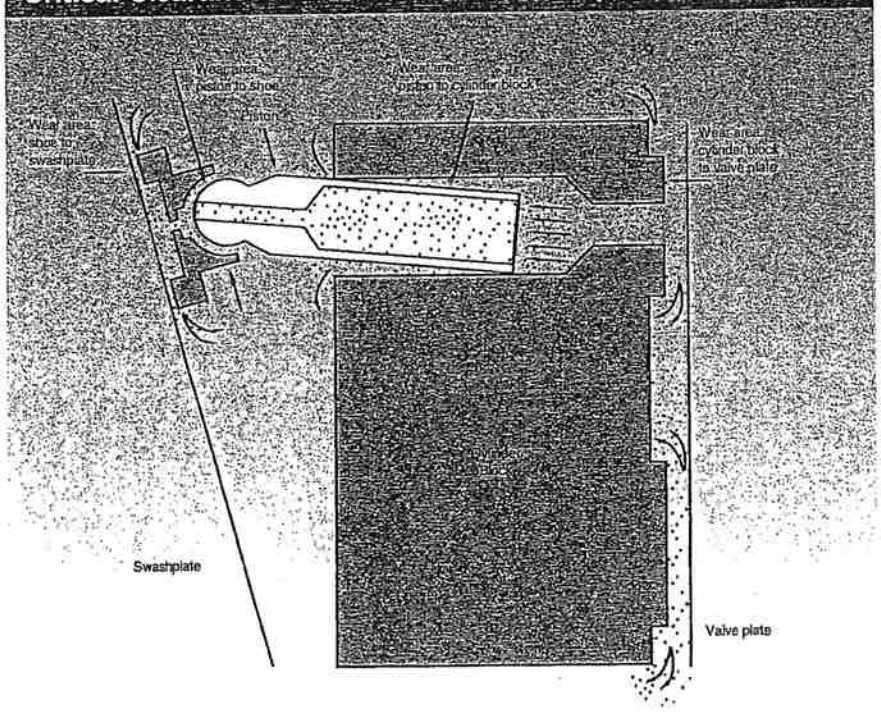

In an electrically operated valve, the forces acting on the solenoid are: flow forces, spring forces, friction forces and inertia forces.

Flow, spring and inertia forces are inherent factors, but friction forces are to a great extent dependent on system cleanliness. If the system is heavily contaminated with particles similar in size to the radial and diametrical clearances, higher forces will be needed to move the spool.

An even worse situation results from silting, where contaminant is forced into the clearances under pressure, eventuall leading to breakdown of the oil film and spool binding.

This situation occurs when valves subjected to continuous pressure are operated infrequently. Such valves should preferably have local filtration of a high efficiency in the pressure line but due account should be taken of possible pressure surges generated during component operation. The use filters as a special protection for single units or groups of units can result in th need for a large filter element of high capacity, if the general cleanliness lev in the system is poor.

Some idea of the forces needed to br this spool binding, compared with the force available from the solenoid, can gained from the example of a CETOF valve operating at 3000 psi (210 bar). If a valve of this type remains in the spring offset or energized position fo lengthy period of time, silting takes p between spool and bore and can cau total immobility. The force needed to overcome this state has been found through experiments to be approxim 30 pounds, but both spring and sole are designed to exert only 10 pound The effect of the excessive silting ca total system failure.

Valve Spool Critical Clearance

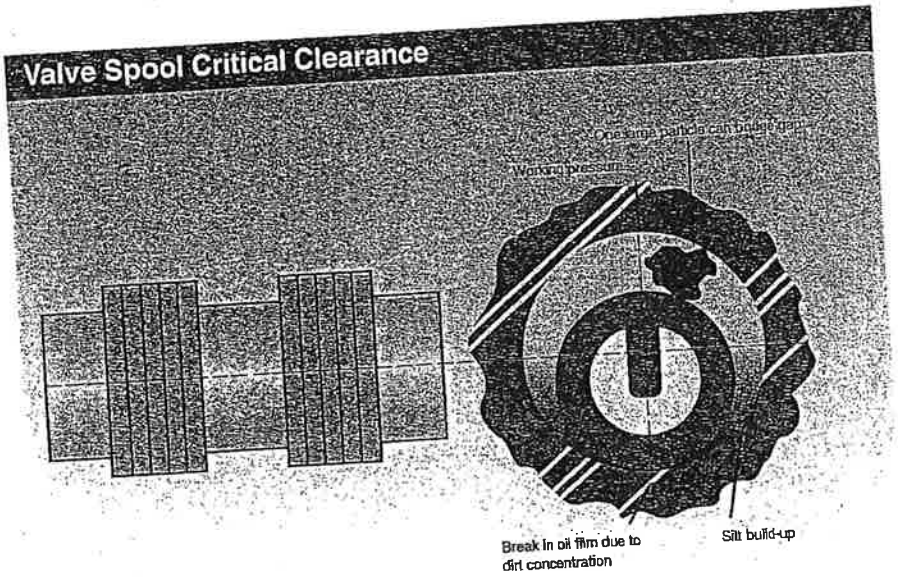

Valve Spool Clearances (with flows and forces)

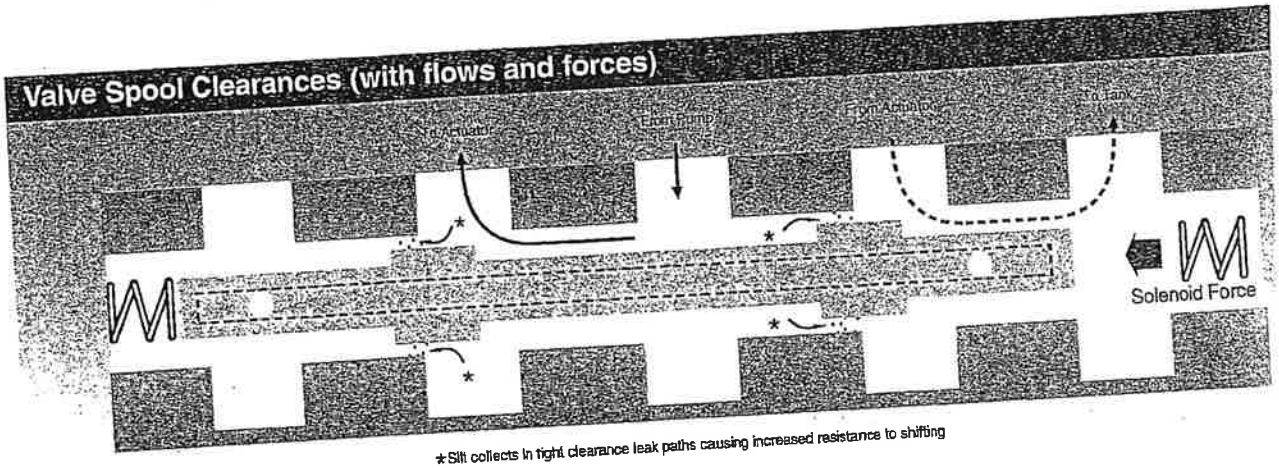

*Silt collects in tight clearance leak paths causing increased resistance to shifting

Pressure Controls

Abrasive particles in high velocity streams of oil erode internal surfaces. This situation is common to pressure controls, particularly relief valves which are subjected to maximum system pressure drop. Pilot control stages generally see low volumes at high velocities, and heavy contamination affects both their stability and repeatability.

Flow Controls

The contamination tolerance of flow control valves will depend very much on the orifice configuration. Two different orifices which are of entirely different shape can have equal areas. The groove type will tolerate a high contamination level, except when used at low setting, whereas a flat cut orifice is much more prone to silting at all settings.

With all types of pressure compensated flow controls, the performance of the pressure reducing element can be considerably affected by contamination, irrespective of valve setting. Damage to the metering orifice can also occur, which will become particularly apparent at lower settings.

Generally speaking, all spool-type control valves are affected by contamination in the system, especially at high pressures. The effects are likely to be magnified if precise axial positioning of the spool is necessary as, for example, in pressure reducing valves where limited forces are available to operate the spool. On the other hand, poppet valves, though affected by large particles of contamination, tend to be far more tolerant of silt due to the self-cleaning action of the seat. However, erosion of critical seat surfaces must be avoided.

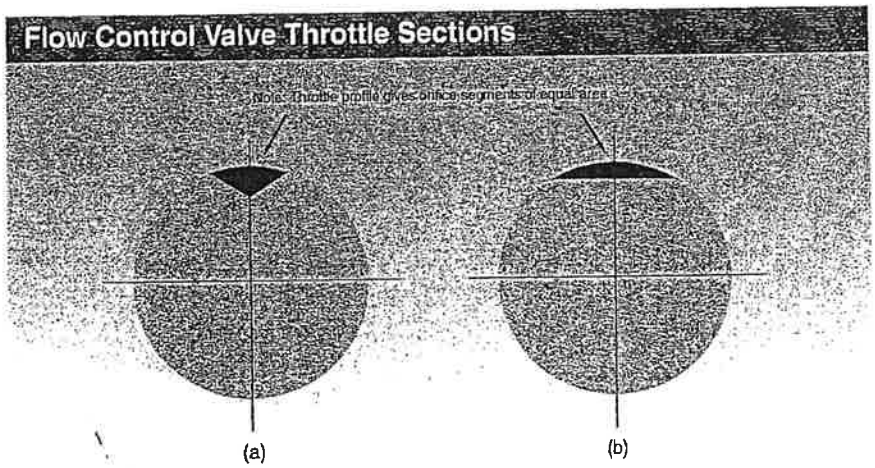

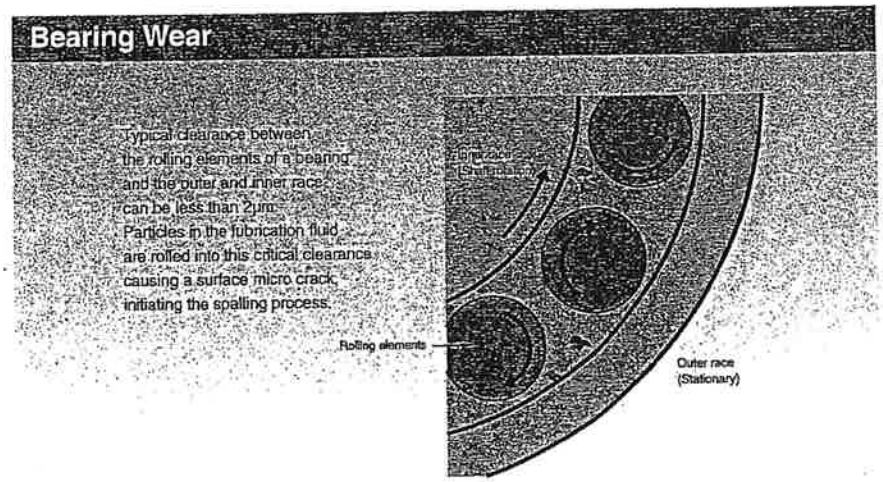

Bearings

In both rolling and siding contact bearings, a thin oil film separates the ball from the race or the journal surfaces from the shaft. As long as there is no direct contact between the moving parts, the expected fatigue life of the bearing approaches infinity. The most common way for direct contact to happen is to have a particle bridge the oil film and contact a moving and stationary surface at the same time. The resulting damage is often a scratch or surface crack that initiates the spalling process. In most bearings, particles as small as 3µm can have a negative impact on the life of the bearing or system.

Piston/shoe Subassembly

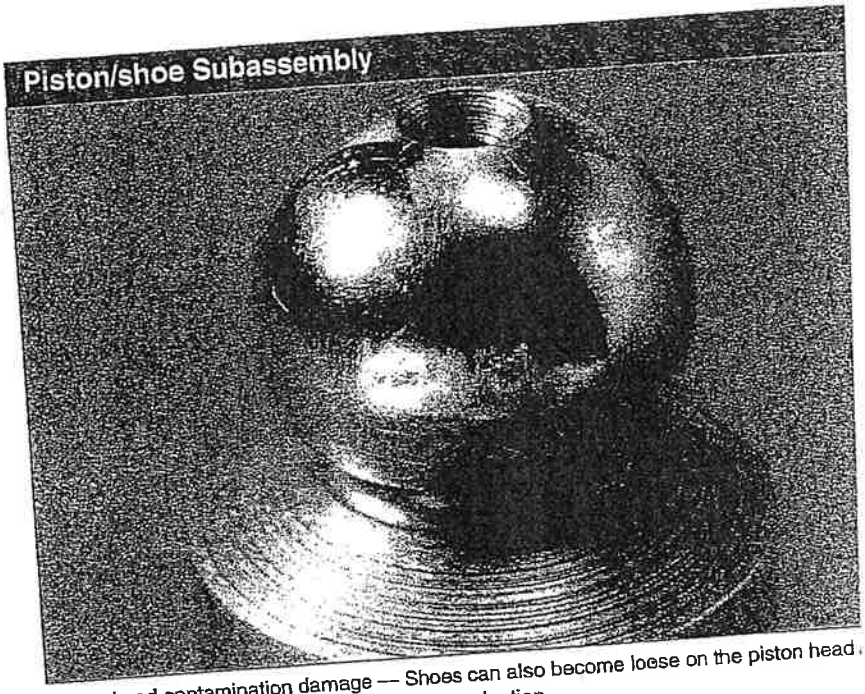

Piston head contamination damage — Shoes can also become loose on the piston head result of severe scoring and pitting from contamination.

Ruined Pistons

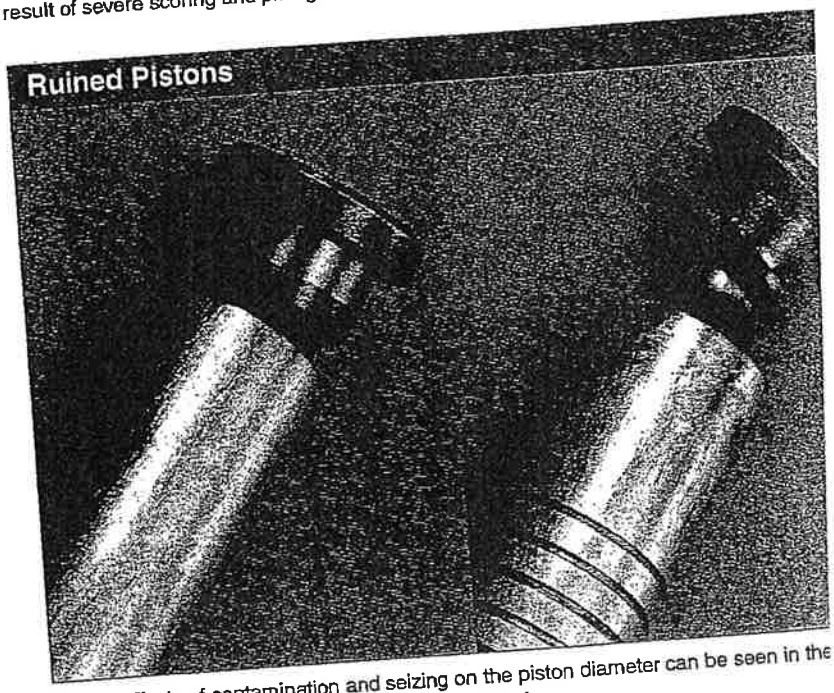

Telltale effects of contamination and seizing on the piston diameter can be seen in the photos. Pistons in this condition cannot be reworked.

Examples of Wear on Actual Vickers Components

Vickers guide to Pump Failure Analysis contains many examples of failures caused by contamination. Typical contamination damage to a piston/shoe, piston and cylinder block is shown here.

Summary

As explained above, an individual large particle arriving at the wrong place at the wrong time can cause catastrophic failure. A small quantity of silt-sized particles can also cause problems by eroding a surface or by building up in a critical area.

Surfaces within components are designed to be separated by an oil film, the thickness of which may be continually changing. When this gap is bridged by contaminants, wear will occur, thereby generating further particles which may be ground into many more smaller particles. Fine particles, individually or in small quantities, may not cause damage. But if present in slightly higher concentrations, they can lead to failure through silting.

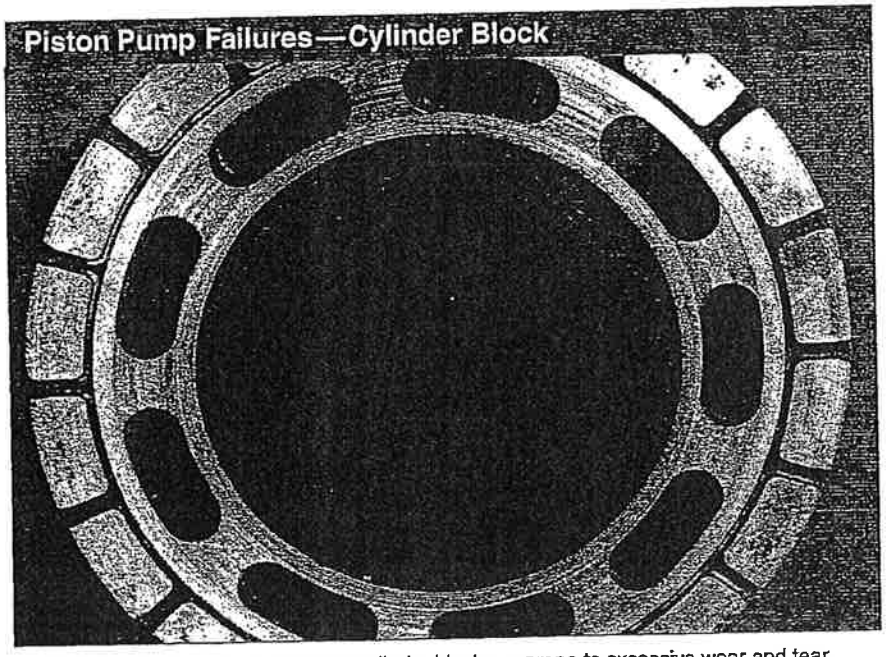

The individual cylinder bores within a cylinder block are prone to excessive wear and tear. This can be due to dry run, lack of lubricity in the fluid or contaminants. Cylinder blocks with worn or scored bores should never be reused.

The top surface of a cylinder block that contacts the valve plate can also become scored or pitted due to improper operating conditions such as aeration, cavitation, contamination and high system temperature.

Setting a Target Cleanliness Level

Setting a Target Cleanliness Level

- Determine the cleanliness recommended for the most sensitive component in system
- Adjust code for fluid type
- Adjust code for external factors that increase the stress on the system components

As stated previously, all hydraulic and lubrication systems should have a target cleanliness level for that specific system clearly stated in their engineering documentation. This target should be set after considering the components in the system (including the fluid), the typical operation and start-up temperatures, the duty cycle, the systems' required useful life and safety issues. As the actual cleanliness level of the fluid varies by sampling point within the system (i.e. reservoir, pressure line, return line, etc.), the target cleanliness level is assumed to be set for the return line upstream of the return line filter, unless stated otherwise.

In 1976, Vickers first issued a chart giving suggested minimum cleanliness levels for acceptable component life. This graph has been the basis for much that has been written and learned since its publication.

The following chart and procedure have been prepared to help design and maintenance engineers set a target cleanliness level. The cleanliness level recommendations are based on engineering evaluations (including material critical clearances and machining tolerances) and practical field experiences with Vickers and other brands of hydraulic or load bearing components

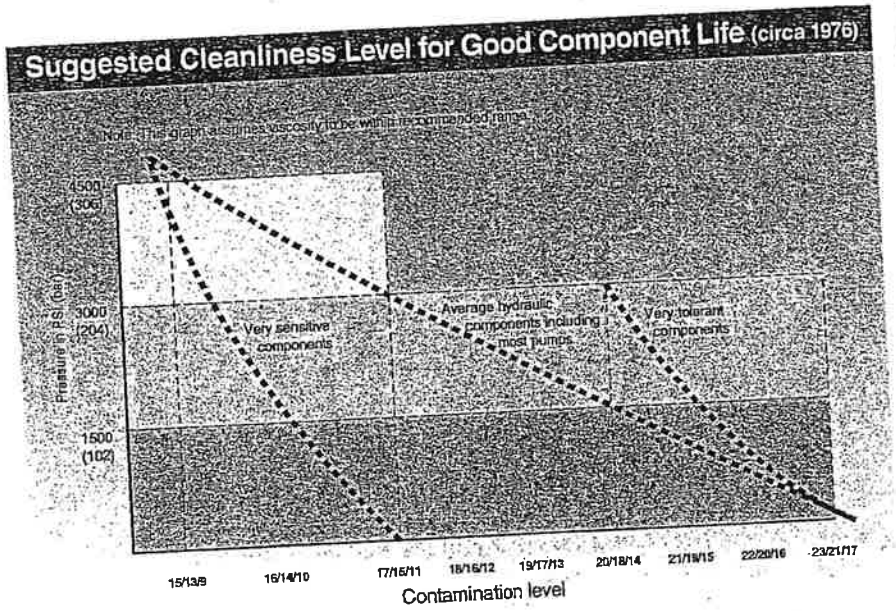

Note: Graph modified to show 3 code cleanliness levels corresponding to the earlier ISO cleanliness codes.

Note: Vickers components are designed and manufactured to high standards that maximize their dirt tolerance. Special materials, surface preparations, and flow paths are utilized to ensure reliable operation. However, Vickers and all other brands of components operate best on properly cleaned fluids. Vickers has prepared these recommendations to help users of hydraulic and oil lubricated machines maximize the in-service life of their individual components and the total system. These recommendations are more valuable than traditional recommendations that focus on the maximum allowable dirt rather than the cleanliness needed for long, trouble free operation.

Vickers Recommended Cleanliness Code Chart

PUMPS Pressure	< 2000 PSI < 140 Bar	< 3000 PSI ≤ 210 Bar	< 3000 PSI > 210 Bar
Fixed Gear	20/18/15	19/17/15	18/16/13
Fixed Vane	20/18/15	19/17/14	18/16/13
Fixed Piston	19/17/15	18/16/14	17/15/13
Variable Vane	19/17/15	18/16/14	17/15/13
Variable Piston	18/16/14	17/15/13	16/14/12

VALVES Pressure		≤ 3000 PSI ≤ 210 Bar	> 3000 PSI > 210 Bar
Directional (solenoid)		20/18/15	19/17/14
Pressure (modulating)		19/17/14	19/17/14
Flow Controls (standard)		19/17/14	19/17/14
Check Valves		20/18/15	20/18/15
Cartridge Valves		20/18/15	19/17/14
Screw-in Valves		18/16/13	17/15/12
Prefill Valves		20/18/15	19/17/14
Load-sensing Directional Valves		18/16/14	17/15/13
Hydraulic Remote Controls		18/16/13	17/15/12
Proportional Directional (throttle) Valves		18/16/13	17/15/12*
Proportional Pressure Controls		18/16/13	17/15/12*
Proportional Cartridge Valves		18/16/13	17/15/12*
Proportional Screw-in Valves		18/16/13	17/15/12
Servo Valves		16/14/11*	15/13/10*

ACTUATORS Pressure	< 2000 PSI < 140 Bar	≤ 3000 PSI ≤ 210 Bar	> 3000 PSI > 210 Bar
Cylinders	20/18/15	20/18/15	20/18/15
Vane Motors	20/18/15	19/17/14	18/16/13
Axial Piston Motors	19/17/14	18/16/13	17/15/12
Gear Motors	21/19/17	20/18/15	19/17/14
Radial Piston Motors	20/18/14	19/17/15	18/16/13
Swashplate Design Motors	18/16/14	17/15/13	16/14/12

HYDROSTATIC TRANSMISSIONS Pressure	< 2000 PSI < 140 Bar	≤ 3000 PSI ≤ 210 Bar	> 3000 PSI > 210 Bar
Hydrostatic Transmissions (in-loop fluid)	17/15/13	16/14/12*	16/14/11*

BEARINGS		
Ball Bearing Systems	15/13/11*	
Roller Bearing Systems	16/14/12*	
Journal Bearings (high speed)	17/15/13	>400 RPM
Journal Bearings (low speed)	18/16/14	<400 RPM
General Industrial Gearboxes	17/15/13	

*Requires precise sampling practices to verify cleanliness levels.

How to Set a Target Cleanliness Level

STEP ONE

Using Vickers Recommended Cleanliness Code Chart, determine the cleanest fluid (lowest code) required by any component in the system. All components that draw fluid from a common reservoir should be considered to be part of the same system even if their operations are independent or sequential (i.e. a central power unit running several different machines). The pressure rating for the system is the maximum system pressure achieved by the machine during a complete cycle of operation.

STEP TWO

For any system where the fluid is not 100% petroleum oil, set the target one Range Code cleaner for each particle size.

Example: If the cleanest code required was 17/15/13 and water glycol is the system fluid, the target becomes 16/14/12.

STEP THREE

If any two or more of the following conditions are experienced by the machine or system, set the target cleanliness one level lower for each particle size.

- Frequent cold starts at less than –18°C (0°F)
- Intermittent operation with fluid temperatures over 70°C (160°F)
- High vibration or high shock operation
- Critical dependence on the system as part of a process operation

Looking at the example above, if this system was expected to cold start and a failure could stop all production, the target cleanliness would become 15/13/11.

Using this three-step procedure the system target cleanliness code for the system is now set.

Achieving Target Cleanliness

Achieving System Cleanliness

- Select a filter with Bx = > 100 performance
- Select a filter with high strength under system stress
- Locate the filters so that they see sufficient system flow to capture the contamination
- Select a filter which will provide long in-service life

There are four major factors in positioning contamination control devices in a hydraulic or lubrication system to achieve a target cleanliness level. They are:

- Initial filter element efficiency
- Filter element efficiency under system stress
- Location and sizing of contamination control devices in the system
- Filter element service life of the system

Filter Element Initial Efficiency

The international standard for rating the efficiency of a hydraulic or lubrication filter is the Multipass Filter Performance Beta Test (ISO 4572). The results of this test are reported as a ratio of number of particles greater than a designated size upstream of the test filter compared with the number of same size particles downstream of the test filter. These results are then expressed as a Beta ratio.

Multipass testing has greatly aided engineers in the development of better and more efficient filter elements, and it has helped the design engineer who needed to specify a filter element's performance. But, there's little correlation between multipass efficiencies and system cleanliness needs. In the final performance analysis, the goal is properly cleaned fluid and not just very high Beta ratios and dirt capacity. The most important information needed by a designer or user of a hydraulic system is

Filter Ratings

Nominal Filtration Rating
Absolute Filtration Rating
Filtration Ratio (Beta)

Nominal Rating—An arbitrary micrometer value indicated by the filter manufacturer. Due to lack of reproductivity, this rating is deprecated.

Absolute Rating—The diameter of the largest hard spherical particle that will pass through a filter under specified test conditions. It is an indication of the largest opening in the filter element.

Filtration Ratio (Bn) — The ratio of the number of particles greater than a given size upstream of the test filter divided by the number of particles of the same size downstream of the test filter.

The Multipass Filter Performance Test

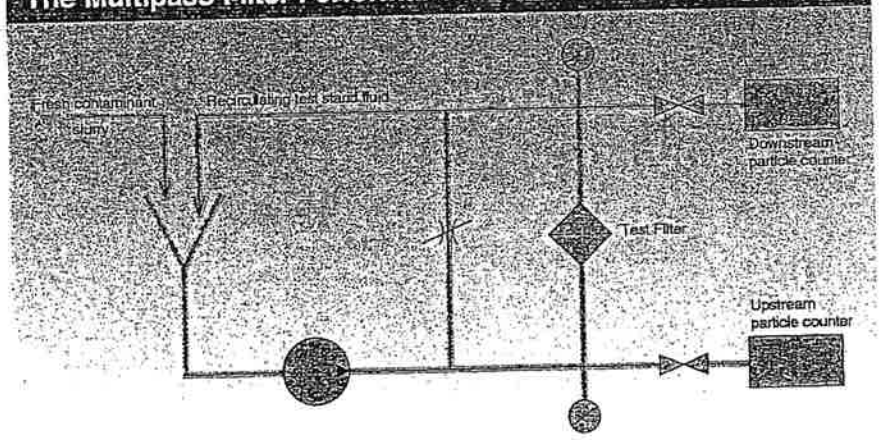

Beta Ratios and Corresponding Efficiencies

Beta Ratios	Efficiency
1	0%
2	50.00%
5	80.00%
10	90.00%
20	95.00%
75	98.70%
100	99.00%
200	99.50%
1000	99.90%
5000	99.98%

Beta ratios and dirt capacity are only a guide to system cleanliness needs.

the system cleanliness they can expect when that filter and media are properly installed in the system.

Each grade of Vickers high efficiency filter media construction is thoroughly multipass tested and then rated with the system cleanliness level expected to be achieved with the use of that product. The assumptions behind these cleanliness ratings are: 1) the filter sees full system flow, 2) the filter is the primary filter in the system, and 3) air breathers along with recognized maintenance practices will limit dirt ingression from the atmosphere.

Vickers Media Construction

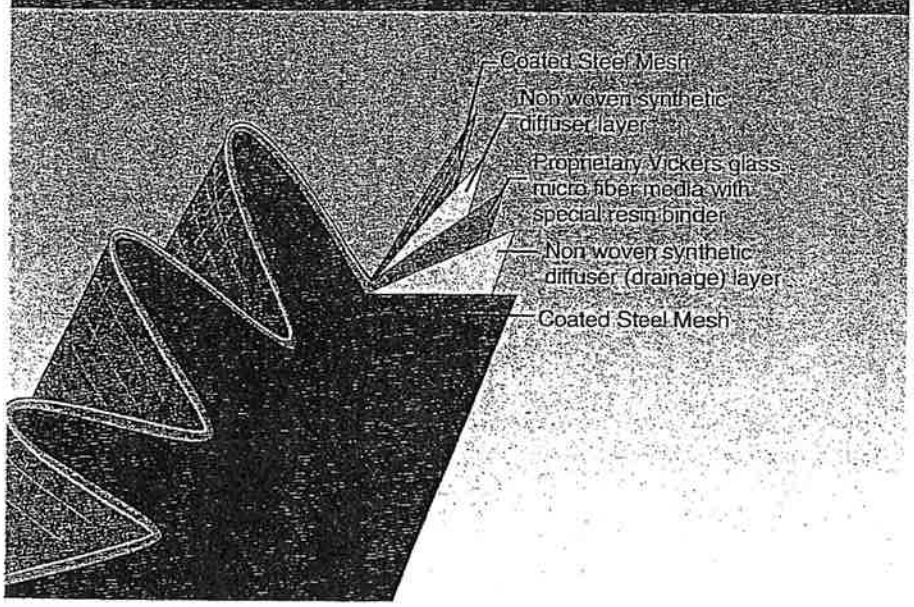

Limits on Correlation Between "Beta" and System Cleanliness and "Dirt Capacity" and Service Life

	Laboratory Procedure	Real World
Pressure Rise	One gradual rise	Thousands of changes
Fatigue Cycles	One	Millions
Element Aging	Minutes	Months
Element Life	One hour	800+ hours
Contaminant	AC fine test dust	Debris, water, gas
Challenge Rate	Constant	Always changing
Fluid Used	MIL 5606	Wide variety
Temperature	100°F (38°C)	-20°F to 200°F (-7° to 93°C)
Flow	Steady	Thousands of changes

System Cleanliness Ratings

Code	Number of times flow from pump passes through the system filters (See Note 1)	Typical ISO 4406 cleanliness level achieved (See Note 2)
03	2.0 1.5 1.0 .5	14/12/10 15/13/11 16/14/12 17/15/13
05	2.0 1.5 1.0 .5	16/14/12 17/15/13 18/16/14 19/17/15
10	2.0 1.5 1.0 .5	18/16/14 19/17/14 20/18/15 21/19/16

Note 1

Systems Flow Passes thru Filters	Typical Filter Placements
2.0	Full flow pressure and return
1.5	Full flow pressure or return and recirculation loop
1.0	Full flow pressure or return line
0.5	Recirculation loop sized to 15% of system volume per minute

Note 2

Cleanliness level achieved is affected by percentage of system flow that passed thru the filters, filter housing integrity, element performance and contamination ingression and generation rates. For more detailed assistance, please contact your local Vickers Distributor.

For target cleanliness level selection assistance and proper filter placement guidelines, consult your local Vickers Distributor.

Changes in Flow

In poody supported elements, changes in flow and pressure drop cause the sides of element corrugations to flex and the root to stretch, giving rise to fatigue stresses. Dirt capacity is also lost as areas of the medium have no flow.

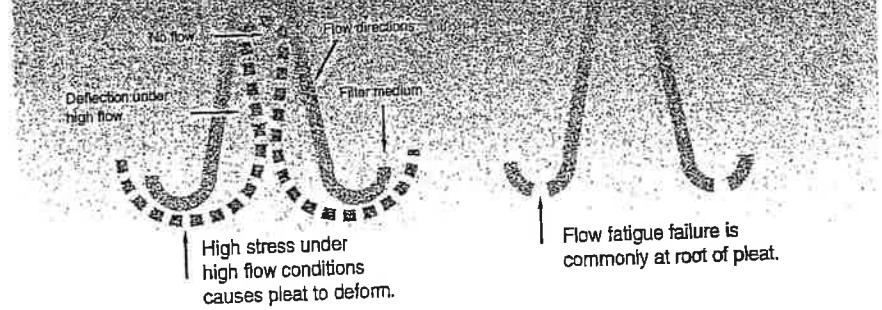

Filter Efficiency Under Stress

A major problem in correlating multipass test claims to real world fluid cleanliness levels is that real systems operation greatly stresses the element. In active systems, flow rate changes (often several a minute), pressure pulses (hundreds a minute), decompression shock waves, cold starts, and other variables all work to degrade a filter's performance. In multipass testing the element is subject to one gradual rise in differential pressure as the element loads!

Flow fatigue test protocol (ISO 3724) leaves many important questions unanswered. Again the element is tested in laboratory conditions that cannot duplicate the interaction of the many forces working to stress and degrade the element. This laboratory test may fail to answer the question of how an aged element will perform during the latter part of its service life.

The best way to deal with this issue is to look at the construction and feel the element pleats. Are the pleats well supported? Do they flex under hand pressure? Any element that fails these simple tests will fail to maintain efficiency and integrity, and will not maintain the targeted cleanliness level.

Additionally, look at the pack construction. Steel wire mesh is very important in element construction. Wire keeps the pleats from flexing, and gives the filter medium the support it needs to keep from failing due to fatigue. The downstream wire mesh also serves as a last chance protection in case of unexpectedly severe stress that causes element media rupture.

Elements without downstream wire mesh are not recommended for use in hydraulic or lubrication systems with even mild stress. This rule is important as the relatively higher cost of wire mesh has lured some filter manufacturers to take the wire mesh out and use cheaper substitutes without dealing with the real world issues of stress and last chance protection.

Filter Matrix Breaking

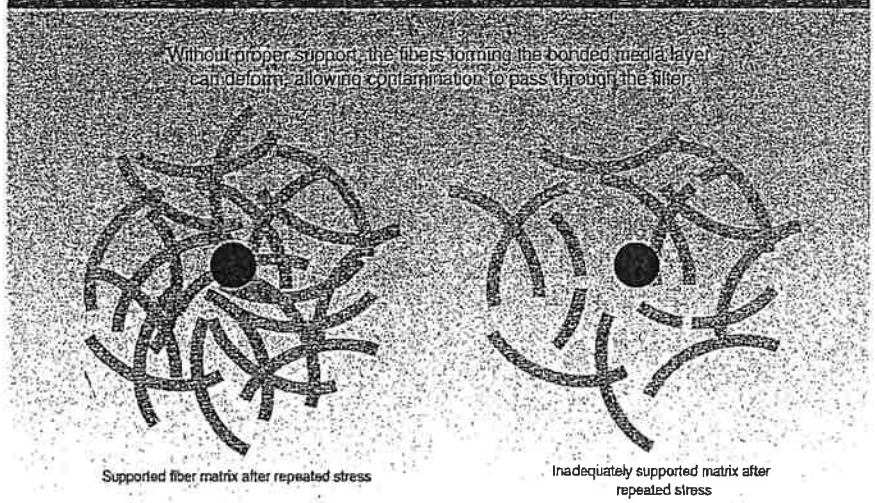

Filter Placements

This chart helps the engineers select the grade of media and the filter placement(s) that will achieve the required target cleanliness. It assumes the system will experience "average" ingression and that maintenance of the system will be consistent with current technology. If in operation the system is running dirtier than expected, corrective actions should be initiated. Suggested corrective actions are:

1. Consider using a finer grade of media.
2. Add a filter to the system.

Target Cleanliness	Full flow pressure line or return line	Full flow pressure line and return line	Pressure or return and recirculating loop at 20% of system volume per minute	Pressure line plus return line plus recirculating loop	Recirculating loop at 20% of system volume per minute	Recirculating loop at 10% of system volume per minute
14/12/10		03	03	03		
15/13/11		03	03	05		
16/14/12	03	05	05	05	03	
17/15/13	03	05	05	05 or 10	03	03
18/16/14	05	10	05 or 10	10	05	03
19/17/15	05 or 10	10	10	10	05 or 10	05
		Recommended filter placements for high ingression systems with fixed volume pumps	Recommended filter placements for systems with variable volume pumps	Recommended filter placements for high ingression systems with variable volume pumps		

Note: All systems need a sealed reservoir with 3 micron air filtration.

Locating Contamination Control Devices

Locating Contamination Control Devices in Open Loop Applications

Main System Contamination Control
- Pressure Line
- Return Line
- Recirculating Loop

Component Isolation
- Sensitive Components
- Safety Issues

Hydraulic Systems — Open Loop

Filter placements in hydraulic systems can be categorized by the three major functions they can perform. These are: ingression prevention, system cleanliness maintenance, and component isolation.

Ingression prevention

All air entering the reservoir needs to be filtered. Removing dirt from air is many times easier than removing it from oil. The first step is to make sure the reservoir is sealed and to ensure that the exchange air enters the reservoir only across sufficiently-sized air filters that are able to extract particles of a size of 3 µm or more from the air. The port(s) needs to be fitted with a Vent Filter designed to remove particles 3 µm and larger from the air (grade "10").

All fluids entering the system should pass through a high efficiency filter (grade "03") before they are added to a system. This is often accomplished by fitting a Transfer Cart with a filter directly downstream of the pump and then using a quick connect coupling (half mounted to the reservoir, half on the discharge hose) requiring the fluid to be pressure pumped into the reservoir. An alternate plan is to have a procedure that requires the fill fluid to pass through the return line filter to enter the system. A third alternative is to use the recirculating pump as a fill pump with the filter in the kidney loop to clean the new oil.

Maintaining System Cleanliness

There are three main places in a circuit where contamination control filters should be located: Pressure line(s), Return line(s), or Recirculating loop.

Pressure Line Filters
- Fixed Volume over 2250 psi (155 bar)
- Variable Volumes over 1500 psi (103 bar)
- System with Servo or Proportional valves

Pressure Line Filter

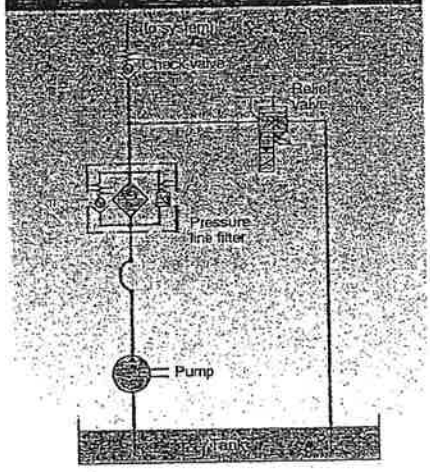

A pressure line filter should be fitted directly downstream of any fixed volume pump operating over 2250 psi (155 bar) and any variable volume pump operating over 1500 psi (103 bar). The rotating group of a pump has a mixture of sliding and rolling contact surfaces which are stressed by high pressure or changing pressure operation. As such, an operating pump is always producing some wear debris. For systems with servo or proportional valves, a high pressure filter should always be used regardless of pump type or pressure. The pressure line filter should be considered the total system contamination control device only if it sees maximum pump flow during more than 60% of the machine duty cycle. If no additional return filter is used, this layout allows the dirt returned from the system to

Pressure and Return Line Filtration

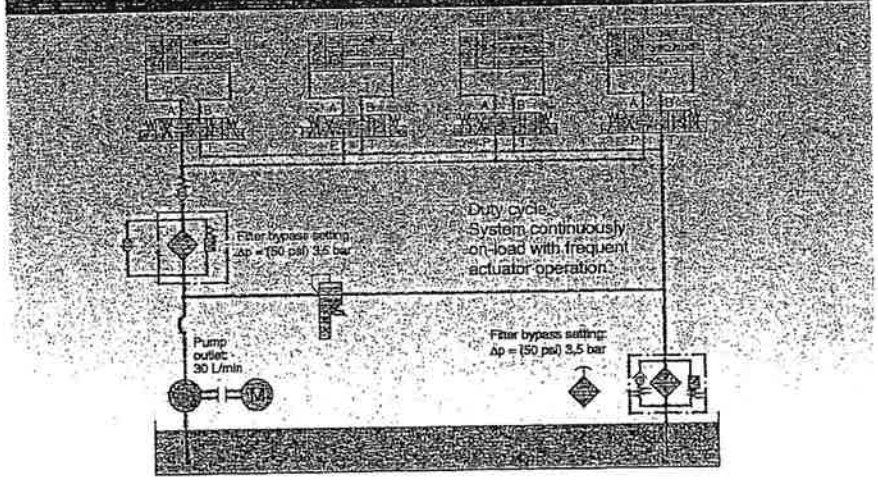

pass the pump, therefore causing increased wear in the pump before it is filtered out.

The return line is an excellent location for the main system contamination control filter, as long as it sees at least 20% of system volume each minute. In cases where return line flow is less than the 20% minimum (periods of operation with the pump in compensation), a supplementary recirculating pump and filter should be designed into the system. Often systems that need recirculating filters also need off-line cooling loops; both these needs can be met by a single pump/motor with the filter upstream of the cooler.

Flow amplification can cause problems for return line filters. Cylinders with a 2:1 or greater differential area between the piston area and rod side piston area mean that during part of the machine duty cycle flow rates can be 2 times pump flow or more. In systems with very high or severely pulsating flows, recirculating loop filters are often the best choice.

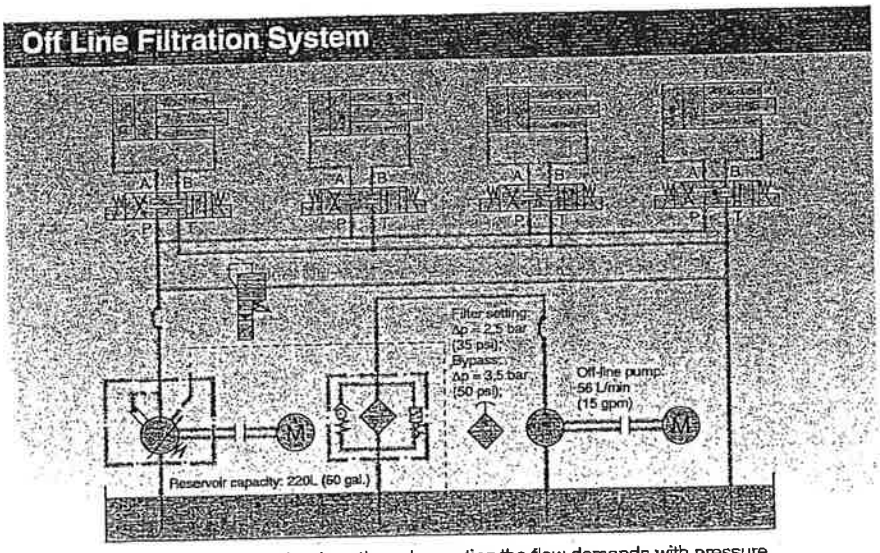

Duty cycle. Pump on load continously meeting the flow demands with pressure compensated control.

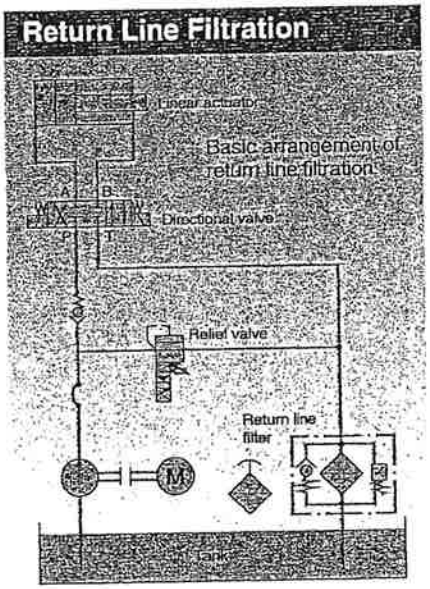

Component Isolation

Protects:
- High Cost Components
- Safety Functions
- Against High Cost Downtime

Protects Sensitive Components:
- Servo Valves (all brands)
- Proportional Valves (all brands)

Component Isolation

Filters to isolate components should be considered for systems or machines to protect downstream components in the event of a pump or other major component failure. Additionally, certain classes of components need dedicated protection based on their design clearance or fine metering edges.

Whenever a primary failure can cause a secondary failure with unacceptable consequences, an isolation filter or strainer should be placed upstream of that component. Since pumps have finite life and as they fail the debris travels downstream to the valves, care should be taken to place a strainer in-line ahead of any valve that has a safety consideration or critical function to the system.

Servo and proportional valves have fine tolerance spools that modulate in reaction to small changes in pilot flow or proportional solenoid forces. Even small quantities of fine silt can cause degraded operation. Individual valves or banks of valves should be isolated with a non-bypass filter that protects these components from silt and chips that could enter a system during maintenance of other components. For large servo or proportional valves with external pilot flow, a smaller, less expensive non-bypass filter [1] can be placed in the pilot line while the main valve is protected by the system filter [2]. Filter [3] is an optional location. A common mistake that should be avoided is selecting a component isolation filter that is finer than the system filter. This forces the isolation filter to perform the general system clean-up function, and results in very short element life.

A location not recommended for filter placement is in the case drain flow from open or closed loop pumps. The shaft seal on all pumps must maintain a zero leak seal under very low differential pressure conditions. These seals experience accelerated wear whenever additional back pressure is added to the pump case. If a filter is being considered in a case drain application it should be reviewed with consideration of the effect it will have to the shaft seal life.

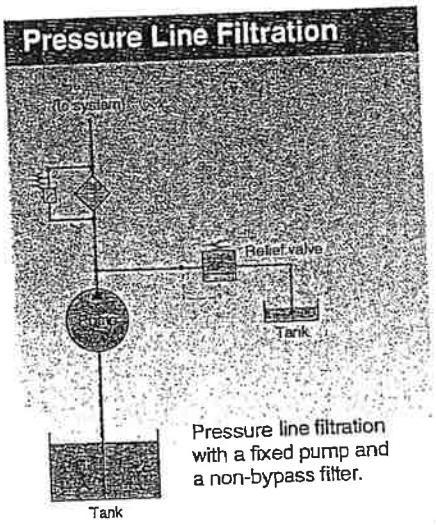

Pressure line filtration with a fixed pump and a non-bypass filter.

Hydraulic Systems–Closed Loop

The fluid cleanliness level that is significant to a closed loop hydraulic system's long-term dependability is the "in-loop" fluid cleanliness. Normally a high efficiency filter in the charge pump line will maintain the required cleanliness. But, for hydrostatic transmissions running at or near their maximum pressure, in-loop filters with reverse flow valving are recommended. These filters will also protect the motor in case of a pump failure. Remember to consider the percentage of time the transmission runs in each direction when locating the filter. For bi-directional operation with approximately 50% of the duty cycle in each direction, two filter housings should be used.

Closed Loop Hydrostatic Transmission

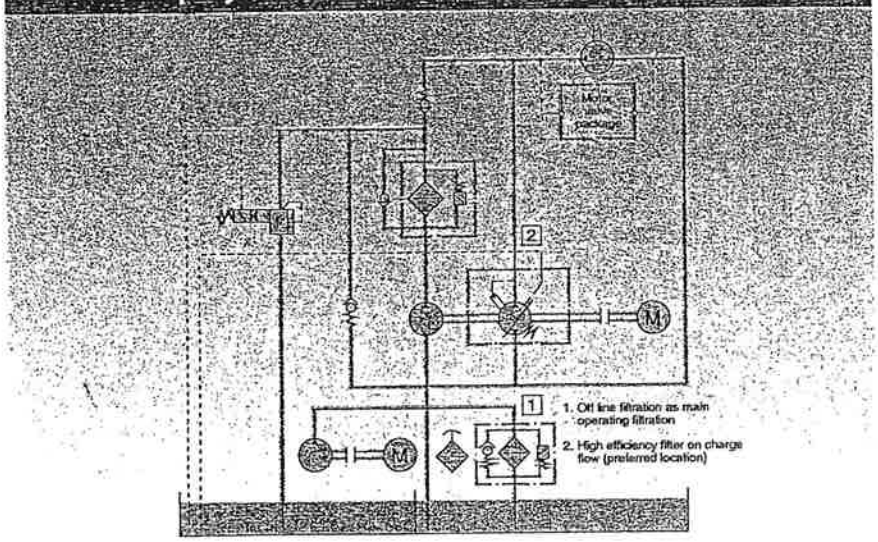

Non Bypass Filter Ahead of a Servo Valve

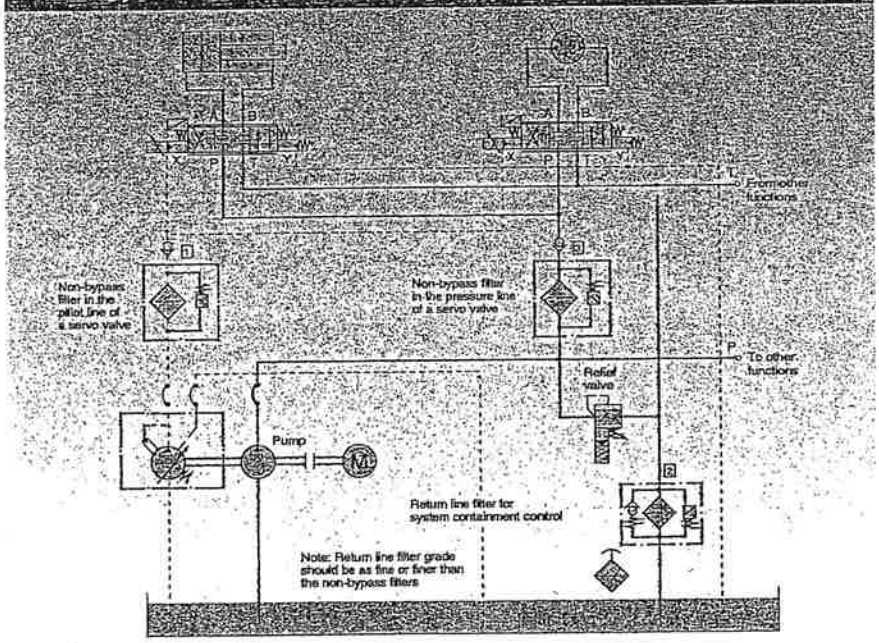

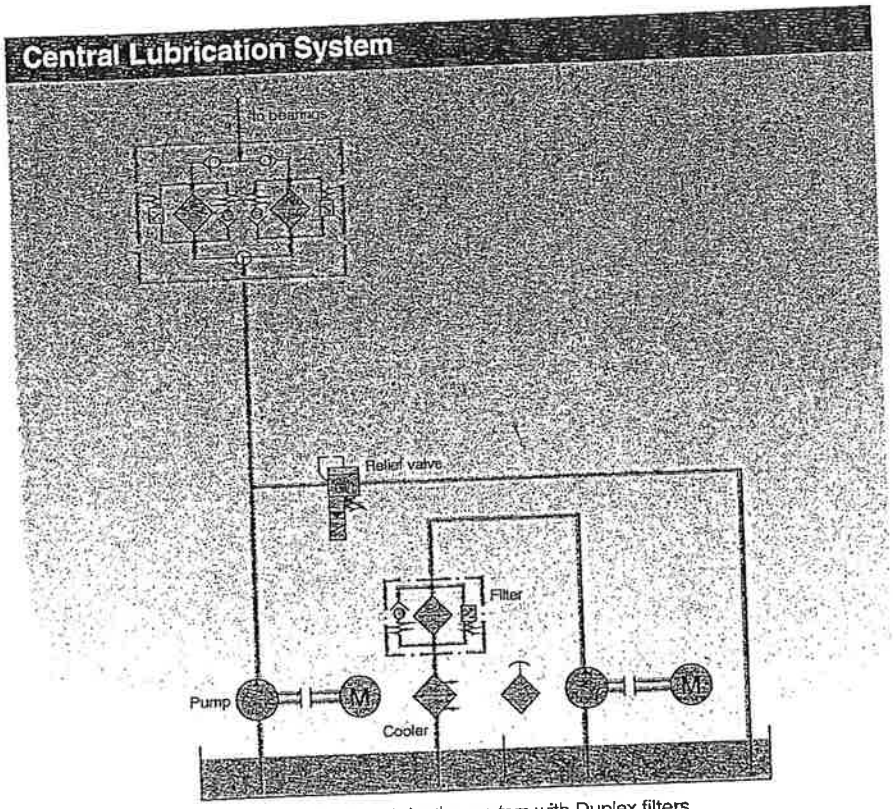

Central lubrication system with Duplex filters and a recirculation cooling and filtration loop.

Lubrication Systems

There are two locations for filters in a lubrication system: pressure line and recirculating loop. For pressure line operation, the filter should be "duplexed" allowing for on line element change while the system is in operation. Recirculating loop filters are excellent (application location) as long as the loop flow is at least 50% of the main pump flow.

Filter Condition Indicators

After the filters are placed within the system, the next consideration is how the user is going to know when to change the element. The answer recommended in DIN 24550 standard is to have all filters fitted with a differential pressure indicator that gives an easy-to-read indication that the element needs to be changed. Vickers indicators are designed to indicate at a pressure drop 20% below the bypass setting which equates to 95% of the element's service life. This indication before bypass feature was incorporated to allow safe operation of the machine until the next shift change or convenient maintenance opportunity.

Filter Condition Indicator

- All filters should be fitted with a condition indicator

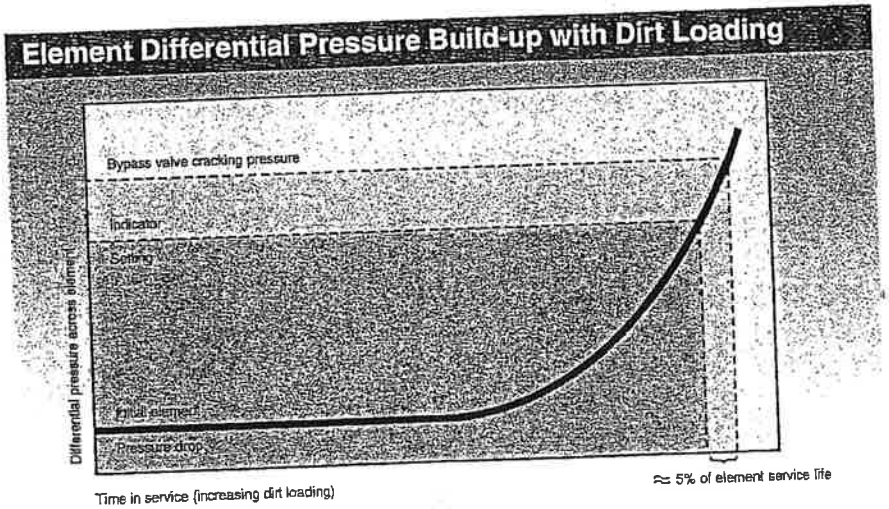

Flushing New or Rebuilt Systems

The most critical time in the life of a hydraulic or lubrication system is the initial run-in period. During this time much of the manufacturing debris in the components and any debris added during the assembly process are washed through the system. It is critical that this contamination be captured quickly and removed from the system while it is in off-load operation.

New System Flushing

There are three steps to a flushing process. First, the machine must feed system fluid through all lines and components. Second, this process must dislodge the dirt from all components and lines, and third, the contaminations must be captured with a high-efficiency filter. Dislodging and transporting dirt is best accomplished by using a low viscosity fluid traveling at high line velocity. Special flushing fluid can be used or the actual system hydraulic fluid can be used at an elevated temperature. To get flow through all the lines, all the valves should be operated several times. In some cases, lines need to be connected around a component to allow high flow fluid to travel through the line. Capture of the debris to flush to a cleanliness level of 16/14/11 reasonably quickly is best accomplished with a Vickers filter using "05" media. This product has the combination of high efficiency and high capacity needed to achieve a successful flush.

Flushing target cleanliness levels should be two ISO codes below the target cleanliness level for system operation. When the new oil is introduced into the properly flushed system, less time and filter element life will be consumed reaching system equilibrium.

Element Service Life

As in any aspect of machine design or maintenance, cost of installation and operation is a very important concern. For filters, the length of time an element lasts in service, and the initial cost of that element, combine to determine the economics of using that product.

The most important aspect of gaining long element service life is to minimize the ingression! Reservoirs need to be fitted with vent filters (≦ 3μm) that remove the dirt before it enters the system. Access port and doors need to be kept sealed so that dirt cannot be drawn into the system. Cylinder rods that extend into contamination laden environments should be shielded to minimize the dirt being drawn into the system.

The second important aspect to long element service life is to keep the cleanliness level of the fluid at or below target. Periods of machine operation with dirty fluid cause accelerated internal wear that loads a filter element. (It's important the debris is caught as it saves the system, but it does cost the element part of its service life.) Always change an element on indication and always use genuine Vickers elements because of their consistent performance and superior strength under stress.

New System Flushing

- Dislodge the dirt and transport it to the filter
- Flow fluid through all lines and components
- Capture the dirt with a high efficiency filter

Element Service Life

- Minimize ingression
- Maintain a constant cleanliness
- Use an element with high dirt capacity
- Use elements with greater media area

The third issue in long element service life is the "dirt capacity" of the element. This value is calculated as part of the multipass efficiency test. Because of the many differences between the test conditions (Fine Test Dust [ACFTD] contamination, single pressure rise, etc.) and real system operation, different dirt capacity values do not correlate well to changes in element service life. Dirt capacity can only be used to compare elements under very specific laboratory situations, and as a result published dirt capacity values should be used as general information rather than specific comparable data.

Vickers elements are designed to give long life and reliable service in hydraulic or lubrication applications. This is achieved with our multi-layer construction. Each layer provides additional strength or capacity leading to overall superior performance. Some elements focus heavily on media structure only, which can give increased "dirt capacity" under laboratory conditions, but no increase in service life is experienced in real systems.

An often overlooked aspect of dirt capacity and service life is the effect of element area. When comparing an element of "x" area with an element of "2x" area, one would expect twice the life for the larger element. But, in real systems, the life extension is most often between 2.5 and 3.5 times as long. This is because the reduced flow density through a unit area of media allows for more effective contaminant capture. Larger elements are the most cost effective approach to contamination control from the perspective of operating costs.

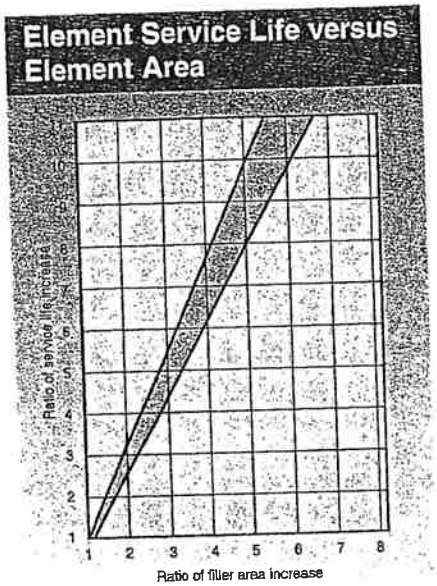

Confirming and Monitoring Achievement of Target Cleanliness

Once the target cleanliness level has been set, and the filters have been selected and located in the system, the last and ongoing step is to confirm and monitor that the target cleanliness is being achieved. The best way to confirm the target is being reached is to take a representative sample from the return line, ahead of the filter and send it to a qualified laboratory that reports particle counting per ISO 4406 (modified to include 2µm counts).

Quality laboratories, like the Vickers Fluid Analysis Service, report the cleanliness level with three ranges codes corresponding to 2µm, 5µm, 15µm. From this information, it is possible to determine that the hydraulic or lubrication system has the clean fluid it needs for long dependable operation.

New developments in the environmental sciences have resulted in passage of laws concerning the disposal of used hydraulic or lubrication fluids. Cost conscious users of petroleum products have discovered that it is far more cost effective to extend useful oil life by as much as 4-6 times through better contamination control and Systemic Contamination Control practices, thereby avoiding the high costs of frequent replacement and disposal of aged fluids. For more detailed information on how you can realize these savings contact a Vickers distributor trained in systemic contamination control.

Taking A Representative Sample

Taking a representative sample is a very exact science. Generally, the right place to sample a system is in the return line directly ahead of the return line filter. It is good system design to install a permanent sampling valve in that location. Alternate locations for sampling are to take a reservoir sample using a vacuum pump and clean tubing, or sampling from the pressure line directly downstream of the pump. An important factor with reservoir sampling is to be sure the end of the sampling tube is about half way down into the fluid, otherwise "stratification" within the reservoir can cause the sample to be non-representative. Reservoir sampling is the least recommended alternative because of the potentially inconsistent sampling and the need to open the system, inviting contamination, to obtain the sample.

Monitoring System Cleanliness

- Sample from the return line ahead of the return line filter
- Sample from an active system
- Obtain particle counts for 2µm, 5µm and 15µm

New Oil versus Filters

- The high financial and environmental cost of oil disposal makes filtering the better option

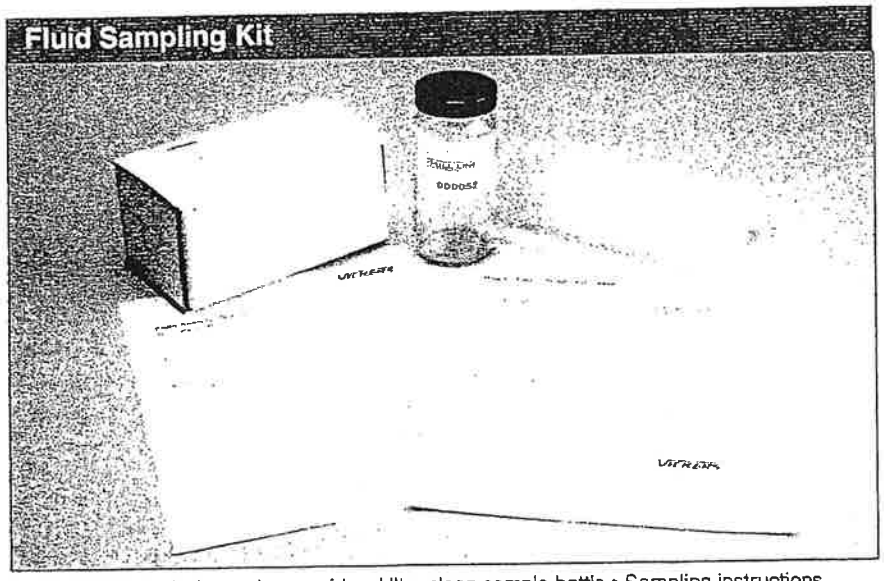

Vickers Fluid Analysis service provides: Ultra clean sample bottle • Sampling instructions • Submittal form • Protective bag • Mailing box

SHELL TELLUS® PLUS OILS

Premium quality circulating and anti-wear hydraulic oils

Product Description

Shell Tellus®Plus Oils are available in seven ISO viscosity grades for use in virtually all machine lubrication and hydraulic fluid applications. The grades range from ISO VG 22 to 220. Tellus Plus Oils are premium products formulated with an effective anti-wear compound compatible with copper bearing components for hydraulic or circulating systems requiring high quality anti-wear oils, such as those recommended by hydraulic pump and machine tool manufacturers. They are formulated with severely hydroprocessed Group II base oils with superior thermal and oxidative stability.

Applications

- hydraulic oil systems, particularly those utilizing positive displacement, high speed/pressure pumps
- circulating oil systems
- general machine lubrication

Features/Benefits

- outstanding protection against wear, rust and corrosion
- extended system life
- excellent oxidation resistance over long service periods, even with low make-up rates
- superior demulsibility
- rapid air separation
- long-term hydrolytic stability
- long-term thermal stability
- excellent filterability

Approvals and Recommendations

- Denison HF-O
- GM LS-2
- Vickers M-2950-S (Mobile) and I-286-S (Industrial)
- Cincinnati Machine

C-M SPECIFICATION	SHELL PRODUCT
P-68	Tellus Plus 32
P-69	Tellus Plus 68
P-70	Tellus Plus 46

Typical Properties of Shell Tellus Plus Oils

	Test Method	ISO Viscosity Grade						
		22	32	46	68	100	150	220
Product Code		65206	65208	65209	65211	65214	65561	65555
Viscosity:								
@ 40°C, cSt	D 445	22.0	32.0	46.0	68.0	100	152	220
@ 100°C, cSt	D 445	4.4	5.4	6.8	8.7	11.0	14.3	18.1
@ 100°F, SUS	D 88	115	165	237	352	522	802	1167
@ 210°F, SUS	D 88	41.1	44.4	49	55.5	64	77	93
Viscosity Index	D 2270	109	102	102	99	94	90	90
Gravity, °API	D 1298	33.6	32.2	29.5	28.5	27.5	26.6	26.0
Flash Point, COC, °F	D 92	380	410	440	460	470	470	485
Pour Point, °F	D 97	-35	-35	-25	-25	-20	0	0
RBOT, minutes	D 2272	320	320	312	310	300	287	280
Copper Corrosion	D 130	1a	1a	1a	1a	1a	1a	1a
Emulsion Test, 130°F, 30 minutes max	D 1401	Pass	Pass	Pass	Pass	Pass(1)	Pass(1)	Pass(1)
Rust Test	D 665B	Pass	Pass	Pass	Pass	Pass	Pass	Pass
Turbine Oil Stability Test, hrs	D 943	5000+	5000+	5000+	5000+	4000+	2500	2000

(1) Emulsion @180°F

Handling & Safety Information

For information on the safe handling and use of this product, refer to its Material Safety Data Sheetat http://www.equivashellmsds.com. For more information and availability, call 1+800-782-7852 or World Wide Web: http://www.shell-lubricants.com/.

MATERIAL SAFETY DATA SHEET
MSDS Number: 60250E - 13

24 Hour Emergency Assistance: CHEMTEL (877) 276-7283
General Assistance Number: (877) 276-7285

SECTION 1 PRODUCT IDENTIFICATION

MATERIAL IDENTITY: Tellus® Plus 46

PRODUCT CODES: 65209
COMPANY ADDRESS: Equilon Enterprises, LLC, P. O. Box 4453, Houston, TX. 77210-4453

SECTION 2 PRODUCT/INGREDIENTS

CAS#	CONCENTRATION	INGREDIENTS
Mixture	100 %weight	Heavy Duty Hydraulic Oil
64742-54-7	90 - 98 %weight	Hydrotreated heavy paraffinic distillate
Proprietary	1 - 3 %weight	Polymer additives

SECTION 3 HAZARDS IDENTIFICATION

EMERGENCY OVERVIEW
Appearance & Odor: Amber, clear liquid Mild odor
Health Hazards: No known immediate health hazards. High-pressure injection under the skin may cause serious damage.
Physical Hazards: No known physical hazards.
NFPA Rating (Health, Fire, Reactivity): 0, 1, 0
Hazard Rating: Least - 0 Slight - 1 Moderate - 2 High - 3 Extreme - 4

Inhalation:
Inhalation of vapors (generated at high temperatures only) or oil mist may cause mild irritation of the nose, throat, and respiratory tract.

Eye Irritation:
Lubricating oils are generally considered no more than minimally irritating to the eyes.

Skin Contact:
Lubricating oils are generally considered no more than minimally irritating to the skin. Prolonged and repeated contact may result in defatting and drying

of the skin that may cause various skin disorders such as dermatitis, folliculitis or oil acne. Release of the material during high-pressure applications may result in injection under the skin causing possible extensive tissue damage which is difficult to heal.

Ingestion:
Lubricating oils are generally no more than slightly toxic if swallowed.

Signs and Symptoms:
Irritation as noted above. Local necrosis is evidenced by delayed onset of pain and tissue damage a few hours following injection.

Aggravated Medical Conditions:
Pre-existing eye, skin and respiratory disorders may be aggravated by exposure to this product.

For additional health information, refer to section 11.

SECTION 4 FIRST AID MEASURES

Inhalation:
Remove victim to fresh air and provide oxygen if breathing is difficult. Get medical attention.

Skin:
Remove contaminated clothing and shoes and wipe excess from skin. Flush skin with water, then wash with soap and water. If irritation occurs, get medical attention. Do not reuse clothing until cleaned. If material is injected under the skin, transport to the nearest medical facility for additional treatment.

Eye:
Flush with water. If irritation occurs, get medical attention.

Ingestion:
Do not induce vomiting. In general, no treatment is necessary unless large quantities of product are ingested. However, get medical attention.

Note to Physician:
In general, emesis induction is unnecessary in high viscosity, low volatility products such as oils and greases.

SECTION 5 FIRE FIGHTING MEASURES

Flash Point [Method]: 400 °F/204.44 °C [Cleveland Open Cup]

Extinguishing Media:
Material will float and can be re-ignited on surface of water. Use water fog, 'alcohol foam', dry chemical or carbon dioxide (CO_2) to extinguish flames. Do not use a direct stream of water.

Fire Fighting Instructions:
Material will not burn unless preheated. Do not enter confined fire space without full bunker gear (helmet with face shield, bunker coats, gloves and rubber boots), including a positive pressure, NIOSH approved, self-contained breathing apparatus.

SECTION 6 ACCIDENTAL RELEASE MEASURES

Protective Measures:
May burn although not readily ignitable.

Wear appropriate personal protective equipment when cleaning up spills. Refer to Section 8.

Spill Management:
FOR LARGE SPILLS: Remove with vacuum truck or pump to storage/salvage vessels.

FOR SMALL SPILLS: Soak up residue with an absorbent such as clay, sand or other suitable material. Place in non-leaking container and seal tightly for proper disposal.

Reporting:
CERCLA: Product is covered by EPA's Comprehensive Environmental Response, Compensation and Liability Act (CERCLA) petroleum exclusion. Releases to air, land, or water are not reportable under CERCLA (Superfund).

CWA: This product is an oil as defined under Section 311 of EPA's Clean Water Act (CWA). Spills into or leading to surface waters that cause a sheen must be reported to the National Response Center, 1-800-424-8802.

SECTION 7 HANDLING AND STORAGE

Precautionary Measures:
Wash with soap and water before eating, drinking, smoking, applying cosmetics, or using toilet. Launder contaminated clothing before reuse. Properly dispose of contaminated leather articles such as shoes or belts that cannot be decontaminated. Avoid heat, open flames, including pilot lights, and strong oxidizing agents. Use explosion-proof ventilation to prevent vapor accumulation. Ground all handling equipment to prevent sparking.

Storage:
Store in a cool, dry place with adequate ventilation. Keep away from open flames and high temperatures.

Container Warnings:
Keep containers closed when not in use. Containers, even those that have been emptied, can contain explosive vapors. Do not cut, drill, grind, weld or perform similar operations on or near containers.

SECTION 8 EXPOSURE CONTROLS/PERSONAL PROTECTION

Oil mist, mineral	ACGIH TLV	TWA: 5 mg/m3	STEL: 10 mg/m3
Oil mist, mineral	OSHA PEL	TWA: 5 mg/m3	

EXPOSURE CONTROLS
Adequate ventilation to control airborne concentrations below the exposure guidelines/limits.

PERSONAL PROTECTION
Personal protective equipment (PPE) selections vary based on potential exposure conditions such as handling practices, concentration and ventilation. Information on the selection of eye, skin and respiratory protection for use with this material is provided below.

Eye Protection:
Safety glasses with side shields

Skin Protection:
Use protective clothing which is chemically resistant to this material. Selection of protective clothing depends on potential exposure conditions and may include gloves, boots, suits and other items. The selection(s) should take into account such factors as job task, type of exposure and durability requirements.

Published literature, test data and/or glove and clothing manufacturers indicate the best protection is provided by:
Neoprene, or Nitrile Rubber

Respiratory Protection:
If engineering controls do not maintain airborne concentrations to a level which is adequate to protect worker health, an approved respirator must be worn. Respirator selection, use and maintenance should be in accordance with the requirements of the OSHA Respiratory Protection Standard, 29 CFR 1910.134.

Types of respirator(s) to be considered in the selection process include:
For Mist: Air Purifying, R or P style NIOSH approved respirator. For Vapors: Air Purifying, R or P style prefilter & organic cartridge, NIOSH approved respirator. Self-contained breathing apparatus.

SECTION 9 PHYSICAL AND CHEMICAL PROPERTIES

Appearance & Odor: Amber, clear liquid Mild odor
Substance Chemical Family: Lubricants
Appearance: Amber, clear liquid

Flash Point: 400 °F [Cleveland Open Cup]

Pour Point: -20 °F

Specific Gravity: 0.8856

Viscosity: 43 cSt - - 49 cSt @ 40 °C

SECTION 10 REACTIVITY AND STABILITY

Stability:
Material is stable under normal conditions.

Conditions to Avoid:
Avoid heat and open flames.

Materials to Avoid:
Avoid contact with strong oxidizing agents.

Hazardous Decomposition Products:
Thermal decomposition products are highly dependent on combustion conditions. A complex mixture of airborne solids, liquids and gases will evolve when this material undergoes pyrolysis or combustion. Carbon Monoxide, Carbon Dioxide, Hydrogen Sulfide
and other unidentified organic compounds may be formed upon combustion.

SECTION 11 TOXICOLOGICAL INFORMATION

Acute Toxicity
Dermal LD50 >5.0 g/kg(Rabbit) OSHA: Non-Toxic Based on components(s)
Eye Irritation Draize <15 / 110, nonirritating [Rabbit, 24 HOUR(S)] OSHA: Non-Irritating Based on components(s)
Oral LD50 >5.0 g/kg(Rat) OSHA: Non-Toxic Based on components(s)
Skin Irritation Draize <2.0 / 8.0, nonirritating [Rabbit, 24 HOUR(S)] OSHA: Non-Irritating Based on components(s)

Carcinogenicity Classification
Heavy Duty Hydraulic Oil
NTP: No IARC: Not Reviewed ACGIH: No OSHA: No

SECTION 12 ECOLOGICAL INFORMATION

Environmental Impact Summary:

There is no ecological data available for this product. However, this product is an oil. It is persistent and does not readily biodegrade. However, it

does not bioaccumulate.

SECTION 13 DISPOSAL CONSIDERATIONS

RCRA Information:

Under RCRA, it is the responsibility of the user of the material to determine, at the time of the disposal, whether the material meets RCRA criteria for hazardous waste. This is because material uses, transformations, mixtures, processes, etc. may affect the classification. Refer to the latest EPA, state and local regulations regarding proper disposal.

SECTION 14 TRANSPORT INFORMATION

US Department of Transportation Classification
This material is not subject to DOT regulations under 49 CFR Parts 171-180.

Oil: This product is an oil under 49CFR (DOT) Part 130. If shipped by rail or highway in a tank with a capacity of 3500 gallons or more, it is subject to these requirements. Mixtures or solutions containing 10% or more of this product may also be subject to this rule.

SECTION 15 REGULATORY INFORMATION

FEDERAL REGULATORY STATUS

OSHA Classification:
Product is hazardous according to the OSHA Hazard Communication Standard, 29 CFR 19.10.1200, because it carries the occupational exposure limit for mineral oil mist.

Ozone Depleting Substances (40 CFR 82 Clean Air Act):
This material does not contain nor was it directly manufactured with any Class I or Class II ozone depleting substances.

Superfund Amendment & Reauthorization Act (SARA) Title III:
There are no components in this product on the SARA 302 list.

SARA Hazard Categories (311/312):
Immediate Health:NO Delayed Health:NO Fire:NO Pressure:NO
Reactivity:NO

SARA Toxic Release Inventory (TRI) (313):
There are no components in this product on the SARA 313 list.

Toxic Substances Control Act (TSCA) Status:

All component(s) of this material is(are) listed on the EPA/TSCA Inventory of Chemical Substances.

Other Chemical Inventories:
Component(s) of this material is (are) listed on the Canadian DSL, Chinese Inventory, European EINECS, Korean Inventory, Philippines PICCS

State Regulation
The following chemicals are specifically listed by individual states; other product specific health and safety data in other sections of the MSDS may also be applicable for state requirements. For details on your regulatory requirements you should contact the appropriate agency in your state.

SECTION 16 OTHER INFORMATION

HMIS Rating (Health, Fire, Reactivity): 0, 1, 0

Revision#: 13
Revision Date: 03/17/2000
Revisions since last change (discussion): This Material Safety Data Sheet has changed because Equiva Services LLC. has implemented new software to generate the sheet. There will be slight differences in the hazard and precautionary language as we incorporate the guidance contained in the ANSI MSDS standard (ANSI Z400.1-1998). There are no significant changes to the health, safety or precautionary messages. We encourage you to take the opportunity to reread the sheet and review the information contained.

SECTION 17 LABEL INFORMATION

READ AND UNDERSTAND MATERIAL SAFETY DATA SHEET BEFORE HANDLING OR DISPOSING OF PRODUCT. THIS LABEL COMPLIES WITH THE REQUIREMENTS OF THE OSHA HAZARD COMMUNICATION STANDARD (29 CFR 1910.1200) FOR USE IN THE WORKPLACE. THIS LABEL IS NOT INTENDED TO BE USED WITH PACKAGING INTENDED FOR SALE TO CONSUMERS AND MAY NOT CONFORM WITH THE REQUIREMENTS OF THE CONSUMER PRODUCT SAFETY ACT OR OTHER RELATED REGULATORY REQUIREMENTS.

PRODUCT CODES: 65209

Tellus® Plus 46

ATTENTION!

PROLONGED OR REPEATED SKIN CONTACT MAY CAUSE OIL ACNE OR DERMATITIS.
HIGH-PRESSURE INJECTION UNDER SKIN MAY CAUSE SERIOUS DAMAGE.

Precautionary Measures:
Avoid prolonged or repeated contact with eyes, skin and clothing. Wash thoroughly after handling.

FIRST AID

Inhalation: Remove victim to fresh air and provide oxygen if breathing is difficult. Get medical attention.
Skin Contact: Remove contaminated clothing and shoes and wipe excess from skin. Flush skin with water, then wash with soap and water. If irritation occurs, get medical attention. Do not reuse clothing until cleaned. If material is injected under the skin, transport to the nearest medical facility for additional treatment.
Eye Contact: Flush with water. If irritation occurs, get medical attention.
Ingestion: Do not induce vomiting. In general, no treatment is necessary unless large quantities of product are ingested. However, get medical attention.

FIRE

In case of fire, Use water fog, 'alcohol foam', dry chemical or carbon dioxide (CO2) to extinguish flames. Do not use a direct stream of water. Material will float and can be re-ignited on surface of water.

SPILL OR LEAK
Dike and contain spill.
FOR LARGE SPILLS: Remove with vacuum truck or pump to storage/salvage vessels.

FOR SMALL SPILLS: Soak up residue with an absorbent such as clay, sand or other suitable material. Place in non-leaking container and seal tightly for proper disposal.

CONTAINS: Hydrotreated heavy paraffinic distillate, 64742-54-7; Polymer additives, Proprietary

NFPA Rating (Health, Fire, Reactivity): 0, 1, 0
HMIS Rating (Health, Fire, Reactivity): 0, 1, 0

TRANSPORTATION
US Department of Transportation Classification
This material is not subject to DOT regulations under 49 CFR Parts 171-180.

Oil: This product is an oil under 49CFR (DOT) Part 130. If shipped by rail or highway in a tank with a capacity of 3500 gallons or more, it is subject to these requirements. Mixtures or solutions containing 10% or more of this product may also be subject to this rule.

CAUTION: Misuse of empty containers can be hazardous. Empty containers can be hazardous if used to store toxic, flammable, or reactive materials. Cutting or welding of empty containers might cause fire, explosion or toxic fumes from residues. Do not pressurize or expose to open flames or heat. Keep container closed and drum bungs in place.

Name and Address
Equilon Enterprises, LLC
P. O. Box 4453
Houston, TX 77210-4453

TRANSPORTATION EMERGENCY CHEMTEL (877) 276-7283

HEALTH EMERGENCY CHEMTEL (877) 276-7283

ADMINISTRATIVE INFORMATION
COMPANY ADDRESS: Equilon Enterprises, LLC, P. O. Box 4453, Houston, TX. 77210-4453
Company Product Stewardship & Regulatory Compliance Contact: Timothy W Childs
MSDS FAX-BACK Phone Number: (877) 276-7285

THE INFORMATION CONTAINED IN THIS DATA SHEET IS BASED ON THE DATA AVAILABLE TO US AT THIS TIME, AND IS BELIEVED TO BE ACCURATE BASED UPON THAT DATA. IT IS PROVIDED INDEPENDENTLY OF ANY SALE OF THE PRODUCT, FOR PURPOSE OF HAZARD COMMUNICATION. IT IS NOT INTENDED TO CONSTITUTE PRODUCT PERFORMANCE INFORMATION, AND NO EXPRESS OR IMPLIED WARRANTY OF ANY KIND IS MADE WITH RESPECT TO THE PRODUCT, UNDERLYING DATA OR THE INFORMATION CONTAINED HEREIN. YOU ARE URGED TO OBTAIN DATA SHEETS FOR ALL PRODUCTS YOU BUY, PROCESS, USE OR DISTRIBUTE, AND ARE ENCOURAGED TO ADVISE THOSE WHO MAY COME IN CONTACT WITH SUCH PRODUCTS OF THE INFORMATION CONTAINED HEREIN.

TO DETERMINE THE APPLICABILITY OR EFFECT OF ANY LAW OR REGULATION WITH RESPECT TO THE PRODUCT, YOU SHOULD CONSULT WITH YOUR LEGAL ADVISOR OR THE APPROPRIATE GOVERNMENT AGENCY. WE WILL NOT PROVIDE ADVICE ON SUCH MATTERS, OR BE RESPONSIBLE FOR ANY INJURY FROM THE USE OF THE PRODUCT DESCRIBED HEREIN. THE UNDERLYING DATA, AND THE INFORMATION PROVIDED HEREIN AS A RESULT OF THAT DATA, IS THE PROPERTY OF EQUIVA SERVICES, LLC AND IS NOT TO BE THE SUBJECT OF SALE OR EXCHANGE WITHOUT THE EXPRESS WRITTEN CONSENT OF EQUIVA SERVICES, LLC.

33499-28250-100R-2000-05-05 13:35:13

Mobil
Product Data Sheet

Mobil DTE® 20 Series

Hydraulic Oils, Antiwear, Super-Stabilized

Description

Mobil DTE 20 Series high-quality hydraulic oils were developed in cooperation with pump and component manufacturers specifically for severe hydraulic systems using high-pressure, high-output pumps. These oils provide the superior antiwear and film strength characteristics necessary for critical systems. They are formulated from stable, high-quality, high-VI base stocks and additives which provide the specific properties required in hydraulic fluids.

Mobil DTE 20 Series meet the requirements of Denison HF-0, Vickers M-2950-S, and Vickers-286-S providing outstanding antiwear performance in the Vickers V-104C, Vickers 35VQ-25 and Sundstrand pump tests. Their typical 12-stage rating in the FZG Gear test demonstrates a high level of protection against wear and scuffing. Mobil DTE 24, 25, and 26 are approved against Cincinnati Milacron specifications P-68, P-70, and P-69, respectively.

The super-stabilized additive system of the Mobil DTE 20 Series was selected to neutralize the formation of corrosive materials, provide excellent antiwear properties, and multimetal compatibility. This additive system also provides better thin oil film protection against rusting, retention of superior oil cleanliness, and improved compatibility with water.

Applications

Mobil DTE 20 Series oils are Mobil's primary recommendation for most hydraulic applications in industrial, marine and mobile service, including high-pressure systems, systems with servo valves, and all robotics.

Advantages

Mobil DTE 20 Series oils offer the following performance benefits:

- Excellent keep-clean performance for systems critical to deposit buildup, such as sophisticated NC control mechanisms.
- Controlled demulsibility allows the oils to work well when contaminated with small amounts of water, and to separate large amounts of water readily.
- Multimetal compatibility under both wet and dry conditions protects pumps using steel and copper alloys.
- Excellent protection against rust; good thin oil film protection for surfaces intermittently wetted by oil.
- Outstanding load-carrying and antiwear properties provide superior protection against wear.

Typical Characteristics

The following properties are intended as a guide to industry and are not necessarily manufacturing or marketing specifications. They may be changed without notice due to continued product research and development. Physical properties are listed in the table. Values not shown as maximum or minimum are typical and may vary slightly.

		Mobil DTE		
	21	24	25	26
Product Number	60259-9	60262-3	60263-1	60264-9
98 CMCS Code (Drum)	98FE11	98020E	98041E	98064E
Specific Gravity	0.85	0.871	0.876	0.881
Pour Point, °C (°F), max D 97	-30(-22)	-18 (0)	-18 (0)	-18 (0)
Flash Point, °C (°F), min D 92	170 (228)	200 (392)	200 (392)	204 (399)
Viscosity				
cSt at 40°C cSt at 100°C SUS at 100°F SUS at 210°F	11 2.9 65 36	32 5.3 165 44	46 6.7 238 49	68 8.5 335 55
ISO Viscosity Grade	10	32	46	68
Viscosity Index	95	95	95	95
Rust Protection, ASTM D 665, A & B	Pass	Pass	Pass	Pass
Color, ASTM D1500, max	3.0	3.5	4.0	4.0
FZG Gear Test Stages Passed DIN 51534	12	12	12	12

Health and Safety

Based on available toxicological information, it has been determined that these products pose no significant health risk when used and handled properly. Information on use and handling, as well as health and safety information, can be found in the Material Safety Data Sheets which can be obtained from your local distributo or via the Internet on http://emmsds.ihspsl.com.

For additional technical information or to identify the nearest U.S. Mobil supply source, call 1-800-662-4525.

Exxon Mobil Corporation
TECHNICAL PUBLICATIONS
3225 Gallows Road, Fairfax, Virginia 22037-0001

Mobil DTE® 20 Series
PDS I-04 (4/01)

602631-00 MOBIL DTE 25
MATERIAL SAFETY DATA BULLETIN

1. PRODUCT AND COMPANY IDENTIFICATION

PRODUCT NAME: MOBIL DTE 25
SUPPLIER: EXXONMOBIL CORPORATION
3225 GALLOWS RD.
FAIRFAX, VA 22037
24 - Hour Health and Safety Emergency (call collect): 609-737-4411
24 - Hour Transportation Emergency:
CHEMTREC: 800-424-9300 202-483-7616
LUBES AND FUELS: 281-834-3296
Product and Technical Information:
Lubricants and Specialties: 800-662-4525 800-443-9966
Fuels Products: 800-947-9147
MSDS Fax on Demand: 613-228-1467
MSDS Internet Website: http://emmsds.ihssolutions.com/

2. COMPOSITION/INFORMATION ON INGREDIENTS

CHEMICAL NAMES AND SYNONYMS: PET. HYDROCARBONS AND ADDITIVES
GLOBALLY REPORTABLE MSDS INGREDIENTS:
None.
See Section 8 for exposure limits (if applicable).

3. HAZARDS IDENTIFICATION

Under normal conditions of use, this product is not considered hazardous according to regulatory guidelines (See section 15).
EMERGENCY OVERVIEW: Dark Amber Liquid. Note: Pressurized mists may form a flammable mixture. DOT ERG No. : NA
POTENTIAL HEALTH EFFECTS: Under normal conditions of intended use, this product does not pose a risk to health. Excessive exposure may result in eye, skin or respiratory irritation.
For further health effects/toxicological data, see Section 11.

4. FIRST AID MEASURES

EYE CONTACT: Flush thoroughly with water. If irritation occurs, call a physician.
SKIN CONTACT: Wash contact areas with soap and water. Remove and clean oil soaked clothing daily and wash affected area.
INJECTION INJURY WARNING: If product is injected into or under the skin, or into any part of the body, regardless of the appearance of the wound or its size, the individual should be evaluated immediately by a physician as a surgical emergency.

Even though initial symptoms from high pressure injection may be minimal or absent, early surgical treatment within the first few hours may significantly reduce the ultimate extent of injury.

INHALATION: Not expected to be a problem. However, if respiratory irritation, dizziness, nausea, or unconsciousness occurs due to excessive vapor or mist exposure, seek immediate medical assistance. If breathing has stopped, assist ventilation with a mechanical device or mouth-to-mouth resuscitation.

INGESTION: Not expected to be a problem. Seek medical attention if discomfort occurs. Do not induce vomiting.

5. FIRE-FIGHTING MEASURES

EXTINGUISHING MEDIA: Carbon dioxide, foam, dry chemical and water fog.

SPECIAL FIRE FIGHTING PROCEDURES: Water or foam may cause frothing. Use water to keep fire exposed containers cool. Water spray may be used to flush spills away from exposure. Prevent runoff from fire control or dilution from entering streams, sewers, or drinking water supply.

SPECIAL PROTECTIVE EQUIPMENT: For fires in enclosed areas, fire fighters must use self-contained breathing apparatus.

UNUSUAL FIRE AND EXPLOSION HAZARDS: Note: Pressurized mists may form a flammable mixture.

COMBUSTION PRODUCTS: Fumes, smoke, carbon monoxide, sulfur oxides, aldehydes and other decomposition products, in the case of incomplete combustion.

Flash Point C(F): > 200(392) (ASTM D-92).

Flammable Limits (approx.% vol.in air) - LEL: 0.9%, UEL: 7.0%

NFPA HAZARD ID: Health: 0, Flammability: 1, Reactivity: 0

6. ACCIDENTAL RELEASE MEASURES

NOTIFICATION PROCEDURES: Report spills/releases as required to appropriate authorities. U.S. Coast Guard and EPA regulations require immediate reporting of spills/releases that could reach any waterway including intermittent dry creeks. Report spill/release to Coast Guard National Response Center toll free number (800)424-8802. In case of accident or road spill notify CHEMTREC (800) 424-9300.

PROCEDURES IF MATERIAL IS RELEASED OR SPILLED:

LAND SPILL: Shut off source taking normal safety precautions. Take measures to minimize the effects on ground water. Recover by pumping or contain spilled material with sand or other suitable absorbent and remove mechanically into containers. If necessary, dispose of adsorbed residues as directed in Section 13.

WATER SPILL: Confine the spill immediately with booms. Warn other ships in the vicinity. Notify port and other relevant authorities. Remove from the surface by skimming or with suitable absorbents. If permitted by regulatory authorities the use of suitable dispersants should be considered where recommended in local oil spill procedures.

ENVIRONMENTAL PRECAUTIONS: Prevent material from entering sewers, water sources or low lying areas; advise the relevant authorities if it has, or if it contaminates soil/vegetation.

PERSONAL PRECAUTIONS: See Section 8

7. HANDLING AND STORAGE

HANDLING: High pressure injection under the skin may occur due to the rupture of pressurized lines. Always seek medical attention. No special precautions are necessary beyond normal good hygiene practices. See Section 8 for additional personal protection advice when handling this product.

STORAGE: Keep containers closed when not in use. Do not store in open or unlabelled containers. Store away from strong oxidizing agents and combustible materials. Do not store near heat, sparks, flame or strong oxidants.

SPECIAL PRECAUTIONS: Prevent small spills and leakages to avoid slip hazard.

EMPTY CONTAINER WARNING: Empty containers retain residue (liquid and/or vapor) and can be dangerous. DO NOT PRESSURIZE, CUT, WELD, BRAZE, SOLDER, DRILL, GRIND OR EXPOSE SUCH CONTAINERS TO HEAT, FLAME, SPARKS, STATIC ELECTRICITY, OR OTHER SOURCES OF IGNITION; THEY MAY EXPLODE AND CAUSE INJURY OR DEATH. Do not attempt to refill or clean container since residue is difficult to remove. Empty drums should be completely drained, properly bunged and promptly returned to a drum reconditioner. All containers should be disposed of in an environmentally safe manner and in accordance with governmental regulations.

8. EXPOSURE CONTROLS/PERSONAL PROTECTION

OCCUPATIONAL EXPOSURE LIMITS:
When mists/aerosols can occur, the following are recommended: 5 mg/m3 (as oil mist)- ACGIH Threshold Limit Value (TLV), 10 mg/m3 (as oil mist) - ACGIH Short Term Exposure Limit (STEL), 5 mg/m3 (as oil mist) - OSHA Permissible Exposure Limit (PEL)

VENTILATION: If mists are generated, use adequate ventilation, local exhaust or enclosures to control below exposure limits.

RESPIRATORY PROTECTION: If mists are generated, and/or when ventilation is not adequate, wear approved respirator.

EYE PROTECTION: If eye contact is likely, safety glasses with side shields or chemical type goggles should be worn.

SKIN PROTECTION: Not normally required. When splashing or liquid contact can occur frequently, wear oil resistant gloves and/or other protective clothing. Good personal hygiene practices should always be followed.

9. PHYSICAL AND CHEMICAL PROPERTIES

Typical physical properties are given below. Consult Product Data Sheet for specific details.

APPEARANCE: Liquid
COLOR: Dark Amber
ODOR: Mild
ODOR THRESHOLD-ppm: NE
pH: NA
BOILING POINT C(F): > 316(600)
MELTING POINT C(F): NA
FLASH POINT C(F): > 200(392) (ASTM D-92)

FLAMMABILITY (solids): NE
AUTO FLAMMABILITY C(F): NA
EXPLOSIVE PROPERTIES: NA
OXIDIZING PROPERTIES: NA
VAPOR PRESSURE-mmHg 20 C: < 0.1
VAPOR DENSITY: > 2.0
EVAPORATION RATE: NE
RELATIVE DENSITY, 15/4 C: 0.876
SOLUBILITY IN WATER: Negligible
PARTITION COEFFICIENT: > 3.5
VISCOSITY AT 40 C, cSt: 44.2
VISCOSITY AT 100 C, cSt: 6.6
POUR POINT C(F): < -18(0)
FREEZING POINT C(F): NE
VOLATILE ORGANIC COMPOUND: NE
DMSO EXTRACT, IP-346 (WT.%): <3, for mineral oil only
NA=NOT APPLICABLE NE=NOT ESTABLISHED D=DECOMPOSES
FOR FURTHER TECHNICAL INFORMATION, CONTACT YOUR MARKETING REPRESENTATIVE

10. STABILITY AND REACTIVITY

STABILITY (THERMAL, LIGHT, ETC.): Stable.
CONDITIONS TO AVOID: Extreme heat and high energy sources of ignition.
INCOMPATIBILITY (MATERIALS TO AVOID): Strong oxidizers.
HAZARDOUS DECOMPOSITION PRODUCTS: Product does not decompose at ambient temperatures.
HAZARDOUS POLYMERIZATION: Will not occur.

11. TOXICOLOGICAL DATA

---ACUTE TOXICOLOGY---

ORAL TOXICITY (RATS): Practically non-toxic (LD50: greater than 2000 mg/kg). ---Based on testing of similar products and/or the components.
DERMAL TOXICITY (RABBITS): Practically non-toxic (LD50: greater than 2000 mg/kg). ---Based on testing of similar products and/or the components.
INHALATION TOXICITY (RATS): Practically non-toxic (LC50: greater than 5 mg/l). ---Based on testing of similar products and/or the components.
EYE IRRITATION (RABBITS): Practically non-irritating. (Draize score: greater than 6 but 15 or less). ---Based on testing of similar products and/or the components.
SKIN IRRITATION (RABBITS): Practically non-irritating. (Primary Irritation Index: greater than 0.5 but less than 3). ---Based on testing of similar products and/or the components.
OTHER ACUTE TOXICITY DATA: Although an acute inhalation study was not performed with this product, a variety of mineral and synthetic oils, such as those in this product, have been tested. These samples had virtually no effect other than a nonspecific inflammatory response in the lung to the aerosolized mineral oil. The presence of additives in other tested formulations (in approximately the same amounts as in the present formulation) did not alter the observed effects.

---SUBCHRONIC TOXICOLOGY (SUMMARY)---

No significant adverse effects were found in studies using repeated

dermal applications of similar formulations to the skin of laboratory animals for 13 weeks at doses significantly higher than those expected during normal industrial exposure. The animals were evaluated extensively for effects of exposure (hematology, serum chemistry, urinalysis, organ weights, microscopic examination of tissues etc.).

---REPRODUCTIVE TOXICOLOGY (SUMMARY)---

No teratogenic effects would be expected from dermal exposure, based on laboratory developmental toxicity studies of major components in this formulation and/or materials of similar composition.

---CHRONIC TOXICOLOGY (SUMMARY)---

Repeated and/or prolonged exposure may cause irritation to the skin, eyes or respiratory tract. Overexposure to oil mist may result in oil droplet deposition and/or granuloma formation. For mineral base oils: Base oils in this product are severely solvent refined and/or severely hydrotreated. Chronic mouse skin painting studies of severely treated oils showed no evidence of carcinogenic effects. These results are confirmed on a continuing basis using various screening methods such as Modified Ames Test, IP-346, and/or other analytical methods. For synthetic base oils: The base oils in this product have been tested in the Ames assay and other tests of mutagenicity with negative results. These base oils are not expected to be carcinogenic with chronic dermal exposures.

---SENSITIZATION (SUMMARY)---

Not expected to be sensitizing based on tests of this product, components, or similar products.

12. ECOLOGICAL INFORMATION

ENVIRONMENTAL FATE AND EFFECTS:

In the absence of specific environmental data for this product, this assessment is based on information for representative products.

ECOTOXICITY: Available ectoxicity data (LL50 >1000 mg/L) indicates that adverse effects to aquatic organisms are not expected from this product.

MOBILITY: When released into the environment, adsorption to sediment and soil will be the predominant behavior.

PERSISTENCE AND DEGRADABILITY: This product is expected to be inherently biodegradable.

BIOACCUMULATIVE POTENTIAL: Bioaccumulation is unlikely due to the very low water solubility of this product, therefore bioavailability to aquatic organisms is minimal.

13. DISPOSAL CONSIDERATIONS

WASTE DISPOSAL: Product is suitable for burning in an enclosed, controlled burner for fuel value. Such burning may be limited pursuant to the Resource Conservation and Recovery Act. In addition, the product is suitable for processing by an approved recycling facility or can be disposed of at an appropriate government waste disposal facility. Use of these methods is subject to user compliance with applicable laws and regulations and consideration of product characteristics at time of disposal.

RCRA INFORMATION: The unused product, in our opinion, is not specifically listed by the EPA as a hazardous waste (40 CFR,

Part 261D), nor is it formulated to contain materials which are listed hazardous wastes. It does not exhibit the hazardous characteristics of ignitability, corrosivity, or reactivity. The unused product is not formulated with substances covered by the Toxicity Characteristic Leaching Procedure (TCLP). However, used product may be regulated.

14. TRANSPORT INFORMATION

USA DOT: NOT REGULATED BY USA DOT.
RID/ADR: NOT REGULATED BY RID/ADR.
IMO: NOT REGULATED BY IMO.
IATA: NOT REGULATED BY IATA.
STATIC ACCUMULATOR (50 picosiemens or less): YES

15. REGULATORY INFORMATION

US OSHA HAZARD COMMUNICATION STANDARD: When used for its intended purposes, this product is not classified as hazardous in accordance with OSHA 29 CFR 1910.1200.
EU Labeling: Product is not dangerous as defined by the European Union Dangerous Substances/Preparations Directives. EU labeling not required.
Governmental Inventory Status: All components comply with TSCA, EINECS/ELINCS, AICS, METI, and DSL.
U.S. Superfund Amendments and Reauthorization Act (SARA) Title III:
This product contains no "EXTREMELY HAZARDOUS SUBSTANCES".
SARA (311/312) REPORTABLE HAZARD CATEGORIES: None.
This product contains no chemicals subject to the supplier notification requirements of SARA (313) toxic release program.
The following product ingredients are cited on the lists below:

CHEMICAL NAME	CAS NUMBER	LIST CITATIONS
ZINC (ELEMENTAL ANALYSIS) (0.08%)	7440-66-6	22
ZINC ALKYL DITHIOPHOSPHATE (0.67%)	68649-42-3	22

--- REGULATORY LISTS SEARCHED ---

1=ACGIH ALL	6=IARC 1	11=TSCA 4	16=CA P65 CARC	21=LA RTK
2=ACGIH A1	7=IARC 2A	12=TSCA 5a2	17=CA P65 REPRO	22=MI 293
3=ACGIH A2	8=IARC 2B	13=TSCA 5e	18=CA RTK	23=MN RTK
4=NTP CARC	9=OSHA CARC	14=TSCA 6	19=FL RTK	24=NJ RTK
5=NTP SUS	10=OSHA Z	15=TSCA 12b	20=IL RTK	25=PA RTK
				26=RI RTK

Code key: CARC=Carcinogen; SUS=Suspected Carcinogen; REPRO=Reproductive

16. OTHER INFORMATION

USE: HYDRAULIC OIL
NOTE: PRODUCTS OF EXXON MOBIL CORPORATION AND ITS AFFILIATED COMPANIES ARE NOT FORMULATED TO CONTAIN PCBS.
Health studies have shown that many hydrocarbons pose potential human health risks which may vary from person to person. Information provided on this MSDS reflects intended use. This product should not be used for other applications. In any case, the following advice should be

considered:
INDUSTRIAL LABEL
Under normal conditions of intended use, this product does not pose a risk to health. Excessive exposure may result in eye, skin or respiratory irritation. Always observe good hygiene measures. First Aid: Wash skin with soap and water. Flush eyes with water. If overcome by fumes or vapor, remove to fresh air. If ingested do not induce vomiting. If symptoms persist seek medical assistance. Read and understand the MSDS before using this product.
****
For Internal Use Only: MHC: 1* 1* 1* 1* 1*, MPPEC: A, TRN: 602631-00, ELIS: 400327, CMCS97: 970826, REQ: US - MARKETING, SAFE USE: L
EHS Approval Date: 23OCT2002
****

****
Legally required information is given in accordance with applicable Information given herein is offered in good faith as accurate, but without guarantee. Conditions of use and suitability of the product for particular uses are beyond our control; all risks of use of the product are therefore assumed by the user and WE EXPRESSLY DISCLAIM ALL WARRANTIES OF EVERY KIND AND NATURE, INCLUDING WARRANTIES OF MERCHANTABILITY AND FITNESS FOR A PARTICULAR PURPOSE IN RESPECT TO THE USE OR SUITABILITY OF THE PRODUCT. Nothing is intended as a recommendation for uses which infringe valid patents or as extending any license under valid patents. Appropiate warnings and safe handling procedures should be providedto handlers and users. Use or re-transmission of the information contained herein in any other format than the format as presented is strictly prohibited. Mobil neither represents nor warrants that the format, content or product formulas contained in this document comply with the laws of any other country except the United States of America.
****