OPERATOR'S MANUAL

SAFETY AND OPERATION INSTRUCTIONS

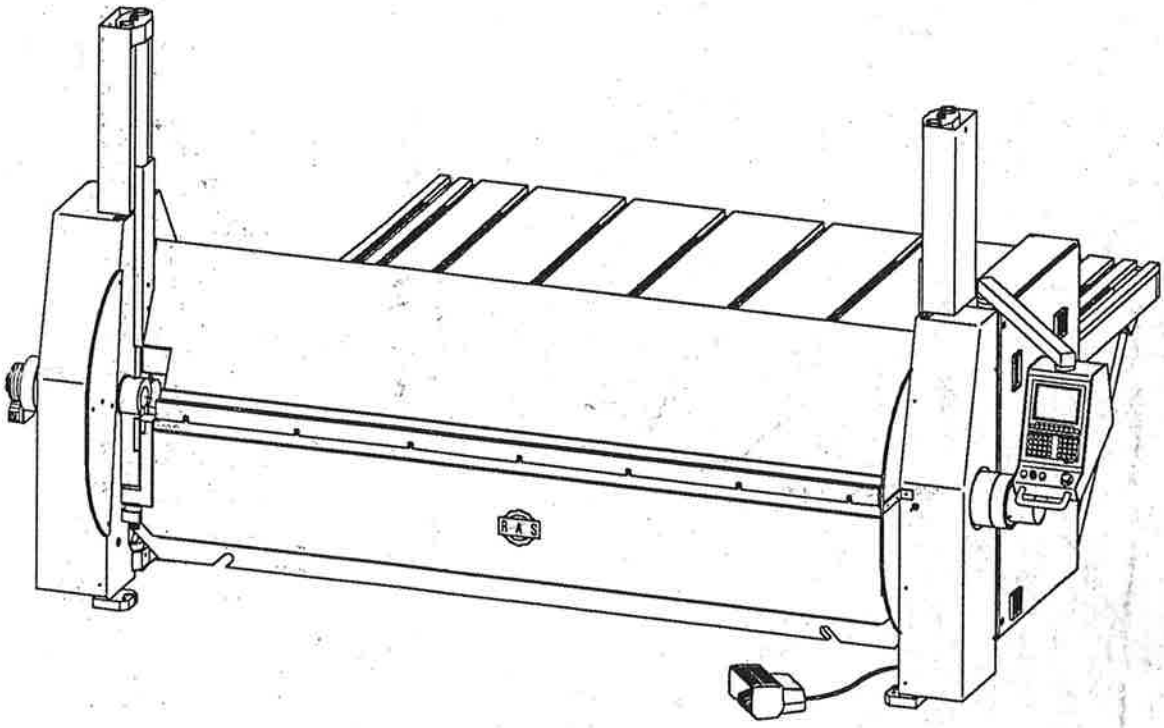

FOLDING MACHINE

RAS 74.20-25-30-40

MULTIBEND 9000

3/93

US-execution

7032 SINDELFINGEN
POSTFACH 369
RICHARD-WAGNER-STR. 4-10

TEL. 07031-618-0
TELEFAX 70731-618-185
TELETEX 7031108 ras

REINHARDT MASCHINENBAU GMBH

OPERATING MANUAL

SAFETY AND OPERATING

INSTRUCTIONS

for

MULTIBEND 9000

RAS 74.20-74.25-74.30-74.40

09.93

US-execution

CONTENTS

1. TECHNICAL DATA 1-1

1.1 RATINGS 1-1

1.2 SUITABLE APPLICATIONS 1-3

2. SAFETY 2-1

2.1 OCCUPATIONAL SAFETY SYMBOL 2-1

2.2 CAUTION SYMBOL 2-1

2.3 GENERAL HAZARDS IF SAFETY DIRECTIVES ARE NOT OBSERVED 2-2

2.4 SAFETY-CONSCIOUS OPERATION 2-3

2.5 OCCUPATIONAL SAFETY DIRECTIVES 2-4

3. RECEIVING INSPECTION, TRANSPORT, CLEANING, INSTALLATION AND COMMISIONING 3-1

3.1 RECEIVING INSPECTION 3-1

3.2 TRANSPORT 3-2

3.3 CLEANING THE MACHINE 3-3

3.4 INSTALLING THE MACHINE 3-4

3.5 FITTING THE REAR PLATE STOP 3-15

4. MAINTENANCE 4-1

4.1 NOTES 4-2

4.2 LUBRICATION 4-3

4.3 CHECKING THE OIL LEVEL, CHANGING THE OIL, REPLACING THE FILTER 4-4

4.3.1 CHECKING THE OIL LEVEL, CHANGING THE OIL 4-4

4.3.2 CHANGING THE FILTER 4-6

4.4 REPLACING THE FILTER MAT 4-7

4.5 SERVOMOTOR 4-7

4.6 GENERAL TECHNICAL INFORMATION 4-8

5. ELECTRICAL EQUIPMENT 5-1

5.1 SAFETY DIRECTIVES 5-1

5.2 MAINS CONNECTION 5-3

5.3 FOOTSWITCH 5-6

5.3.1 FUNCTION OF THE FOOT SWITCH 5-7

5.4 OVERLOAD PROTECTION 5-9

6. WORKING WITH THE MACHINE 6-1

6.1 OCCUPATIONAL SAFETY DIRECTIVES 6-1

6.2 WORKING DIRECTIVES 6-3

6.2.1 FOLDING MATERIALS OF DIFFERENT LENGTHS 6-4

6.2.2 AUTOMATIC FOLDING SEQUENCE 6-5

6.2.3 ADJUSTING THE SAFETY DEVICE FOR MAX. BENDING ANGLE 6-6

6.2.4 BENDING CHEEK SETTING 6-8

6.2.5 LOWER CHEEK SETTING 6-10

6.2.6 SETTING VALUES FOR THE LOWER CHEEK AND BENDING CHEEK 6-11

6.2.7 ADJUSTING PROGRAMMABLE LOWER CHEEK AND BENDING CHEEK 6-13

6.2.8 IMPRESSION BENDING 6-14

6.2.9 REPLACING THE RAIL 6-15

6.2.10 CORRECTING THE STOP DIMENSIONS 6-20

6.2.11 PARALLEL POSITION OF THE STOP 6-21

7. AUXILIARY EQUIPMENT 7-1

7.1 TWO-PERSON OPERATION USING FOOT SWITCH 7-1

7.2 AUTOMATIC TOOL SYSTEM WITH AUTOMATIC CLAMPING 7-4

7.2.1 GENERAL 7-4

7.2.2 FITTING AND REMOVING THE TOOLS 7-5

7.2.3 SCALE AT UPPER BEAM 7-8

"CNC-COLOURGRAPHIC-CONTROLLER MULTIBEND 9000"

-Refer to the separate manual-

ANNEXES

CRANE SUSPENSION WITHOUT REAR STOP

CRANE SUSPENSION WITH REAR STOP

CRANE SUSPENSION - STOP (2 sheets)

FOUNDATION PLAN

INSTALLATION PLAN

LUBRICATING INSTRUCTIONS

LEGEND OF SYMBOLS FOR THE LUBRICATION INSTRUCTIONS

LUBRICANT CHART

EXAMPLE OF BENDING SETTINGS

DRAWING - SWITCHGEAR CABINET RAS 74.20-40

PERFORMANCE CHARTS

HYDRAULIC PLAN

PNEUMATIC PLAN WITH LIST OF EQUIPMENT

INSTALLATION AND OPERATING INSTRUCTIONS FOR CONDITIONERS

LEGEND OF SYMBOLS FOR RATING PLATES

CIRCUIT DIAGRAMS

OPERATING INSTRUCTIONS FOR THE SIEMENS SERVOMOTOR

SEPARATE OPERATING INSTRUCTIONS FOR THE "CNC-COLOURGRAPHIC-CONTROLLER MULTIBEND 9000""

OPERATING INSTRUCTION FOR UNITEK ANALOGUE REGULATION ELECTRONICS FOR MOTOR CONTROL UNITS

1. TECHNICAL DATA

1.1. RATINGS

		RAS 74.20	74.25	74.30	74.40
Useful length	inches	80.3"	100"	126"	159.8"
Max. sheet thickness for 58000 lb/in^2 referred to the standard 45° upper cheek rail and the 1.18" wide bending rail. Max. permitted sheet thickness may be reduced for special rails	inches	0.197"	0.177"	0.158"	0.118"
Min. permitted bending radius		1.25 x sheet thickness			
Min. permitted inner shoulder height	inches	approx. 6 x sheet thickness			
Max. opening width of the upper cheek referred to the standard 45°upper cheek rail	inches	15.75"			
Regulating range of the bending and lower cheeks, bending angle	inches	3.15"			
	degrees	0 - 180			
Max. bending speed	degrees/s.	74			
Max. upper cheek speed - DOWN	inches/s.	1.57"			
- UP	inches/s.	3.62"			

ATTENTION!

For blanks with a higher tensile strength than 58000 lbs/in^2, the max. admissibile sheet thickness will be reduced, corresponding to the attached capacity diagrams.

RAS		74.20	74.25	74.30	74.40
Connected load approx.	kW	11			
Dimensions		refer to the foundation plan			
Net weight without stop	lbs (kg)	9700 (4400)	10600 (4800)	11700 (5300)	13900 (6300)
Net weight with stop	lbs (kg)	10270 (4660)	11195 (5070)	12340 (5590)	
For stop width 118.1"	lbs (kg)				14540 (6590)
For stop width 157.5"	lbs (kg)				15040 (6820)

STOP:

Stop depth	inches	0.4" - 61"			
Regulating speed	inches/s.	7.87"			
Required compressed air supply	lbs/in^2	87			
Net weight	lbs (kg)	570 (260)	595 (270)	640 (290)	
For stop width 118.1"	lbs (kg)				640 (290)
For stop width 157.5"	lbs (kg)				1140 (520)

STANDARD ACCESSORIES:

Angle rail	degrees	45
Bending rail width	inches	1.18"

1.2. SUITABLE APPLICATIONS

The folding machine has been designed exclusively for the standard application of folding sheet-metal parts made of steel or nonferrous metals.

The performance chart for the respective type of machine must be used to determine the max. permitted sheet thickness (refer to the Annex to this operating manual).

Any other application is regarded as being unsuitable. The manufacturer cannot accept liability for any damage resulting thereof - this is at the user's own risk.

Suitable application also includes observance of the operating, maintenance and repair conditions prescribed by the manufacturer.

The folding machine may only be used, serviced or repaired by personnel who are familiar with it and who have been informed of the associated dangers.

The relevant accident prevention regulations and other generally acknowledged safety regulations must be observed.

The manufacturer cannot accept liability for any damage resulting from unauthorized modifications to the machine.

Notes:

2. SAFETY

2.1. OCCUPATIONAL SAFETY SYMBOL

You will find this symbol alongside all important occupational safety directives in this operating manual (OM), which constitute a danger to life and limb. Observe these directives and be particularly careful in such situations. Pass on all occupational safety directives to other users. The general safety and accident prevention regulations valid in your country must also be observed, as well as the directives contained in this OM.

2.2. CAUTION SYMBOL

ATTENTION!

This "CAUTION" can be found in those sections of this OM which require particular attention to ensure that the guidelines, regulations, directives and proper working sequence are observed, and to prevent damage or destruction of the machine and/or other components.

2.3. GENERAL HAZARDS IF SAFETY DIRECTIVESARE NOT OBSERVED

The machine has been built according to the state of the art and is safe to operate. In spite of this, the machine may prove to be dangerous if incompetently operated by untrained personnel or used for unsuitable applications.

Such actions may incur

– Danger to life and limb of the user or a third party

ATTENTION! – Impairment of the machine and other property belonging to the user

ATTENTION! – Danger to efficient machine operation

Everybody involved in the installation, commissioning, operation, maintenance and repair of this machine on the user's premises must have read and understood this operating manual and, in particular, Chapter 2 "SAFETY". We recommend that the using company draws up internal instructions, taking the known specialist qualifications of the members of staff involved into consideration, and to require written confirmation of receipt of the instructions - operating manual and/or participation in familiarization - training.

This item also applies to the separate operating manual "CNC CONTROL MULTIBEND 9000" for RAS 74.20-40, enclosed with these instructions.

2.4. SAFETY-CONSCIOUS OPERATION

— The machine may only be operated by qualified, authorized operators, who have been trained by their superiors.

— The areas of responsibility for machine operation must be clearly defined and maintained to ensure that there are no conflicts of authority as far as safety aspects are concerned. This applies, in particular, to work on electric, hydraulic and pneumatic equipment, which may only be carried out by qualified specialists.

The machine must always be disconnected from the mains prior to commencing installation, commissioning, operation, conversion, adaptation, maintenance and repair work. For this, the main switch on the switchgear cabinet must be turned off (position 0) and secured with a padlock. The member of staff responsible for the work must take possession of the key.

The main switch must be turned off and secured with a padlock prior to working inside the switchgear cabinet. Furthermore, the main electric supply line from the mains to the switchgear cabinet must be disconnected. Care must be taken to ensure that the main supply line cannot be connected during work. Before starting work, the responsible member of staff must satisfy himself that the supply line really is dead by means of a measuring instrument.

2.5. OCCUPATIONAL SAFETY DIRECTIVES

1. Any method of working which detrimentally affects safety on the machine must be prohibited (refer to the following items).

2.

The machine may only be operated by qualified, authorized personnel who have read and understood this operating manual.

3.

The operator may only activate and operate the machine after he has been suitably trained and has read and understood the operating manual.

4. The operator shares the responsibility of ensuring that no unauthorized personnel work on the machine.

5. The operator is obliged to check the machine for obvious damage and faults at least once during a shift and to report any changes to the machine - which affect safety - to his superior immediately.

6. The user shall undertake to always operate the machine in immaculate condition only.

7.

Electrical hazards - misuse or incorrect installation work on the machine can lead to an electric shock, damage or death. Installation work must comply with the "National Electric Code" (Article 250 - grounding etc.).

8.

Work may only be carried out on the electrical installation of the machine by an authorized electrician. Before connecting the machine, check that the operating voltage and

9.

No safety devices may be removed or disabled.

The upper cheek, bending cheek and rear stop may constitute a danger to life and limb.

10.

The machine must always be at a standstill before commencing any maintenance or repair work.

The machine must always be disconnected from the mains before commencing repair or maintenance work. For this, the main switch on the switchgear cabinet must be turned off (position 0) and secured with a padlock. The member of staff responsible for this work must take possession of the key to this padlock.

The electrical supply line from the mains to the switchgear cabinet must also be disabled before starting work inside the switchgear cabinet. Care must be taken to ensure that the main supply line cannot be activated during work. The responsible member of staff must satisfy himself, with a measuring instrument, that the supply line is really dead prior to starting work.

Furthermore, additional measures, such as preventing access to unauthorized personnel, are absolutely necessary.

11.

If it is necessary to remove any protective devices for repair or maintenance work, these may only be removed while the machine is switched off (refer to 10.). These protective devices must be replaced immediately after repair work has been completed.

12.

The machine may only be reconnected to the mains when all protective devices have been installed and activated.

13.

The switchgear cabinet may only be opened when the main switch has been turned off (position 0).

14.

Once electrical installation or repair work has been carried out, the fitted protective devices must be tested by an authorized electrician (e.g. grounding resistance).

15.

Adjustment or setting work may only be carried out on the machine when it is switched off - main switch on the switchgear cabinet to the 0 position (refer to 10.).

16.

Any unauthorized conversion or modification work on the machine is prohibited in the interest of safety.

17. **Wooden blocks must be fitted under the swung up bending cheek to prevent it sinking during service or repair work. Proceed as follow for this:**

In "SERVICE MODE", swing the bending cheek upwards by approx. 92° (refer to the separate "CNC-COLOURGRAPHIC-CONTROLLER MULTIBEND 9000" instructions for RAS 74.20-40). Once the bending cheek has been swung up by approx. 92°, two wooden blocks must be placed under the bending cheek - in accordance with the picture below. These wooden blocks must have a cross-section of at least 2.5 inches x 3 inches and should be approx. 33.5 inches long.

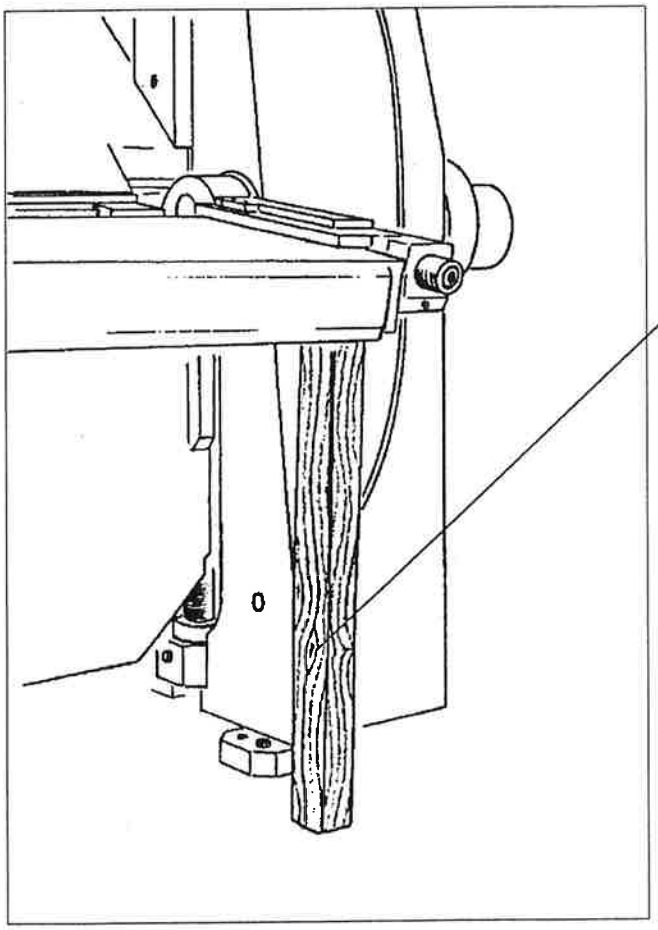

Wooden blocks on the left and right-hand sides of the bending cheek.

The folding machine must be disconnected from the electric system under all circumstances once the wooden blocks have been installed. The bending cheek then swings slowly downwards - lowered by its own weight. Once the bending cheek is resting firmly on the wooden blocks, the main switch on the switchgear cabinet must be turned off.

The main switch must be secured with a padlock to prevent inadvertent activation. The member of staff responsible for the work must take possession of the key.

The bending cheek must never be lowered mechanically as this may possibly cause the entire folding machine to topple over.

Once work has been completed, the wooden blocks under the bending cheek must be removed again before the folding machine is reconnected to the electric system.

For this, apply a hammer to the wooden blocks, approx.
4 inches above the floor of the hall and drive them out (refer to the figure below).

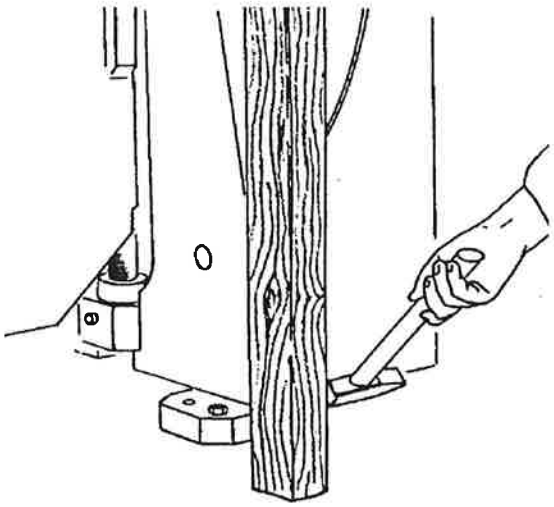

The bending cheek will tip down by approx. 2 inches when the wooden blocks are driven out.

The folding machine may only be switched on at the switch-gear cabinet once the wooden blocks have been removed

18. **If it is necessary to raise the upper cheek to replace rails or for repair work, this must be secured with two hardwood blocks (refer to the figure below - minimum cross-section 3 inches x 3 inches).**

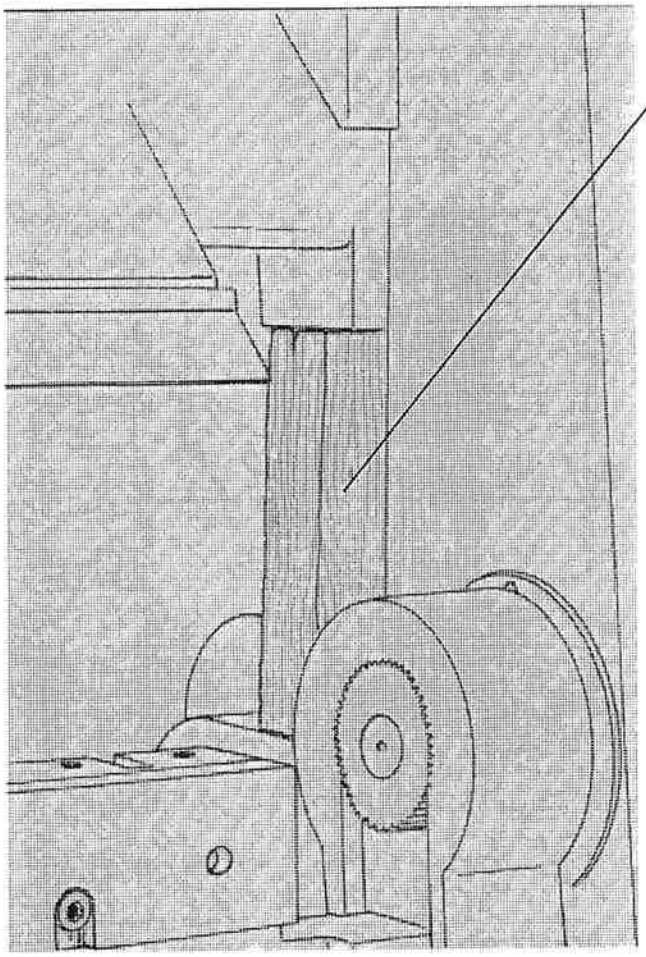

Wooden blocks on the left and
right-hand side

19.

The operator must ensure that it is not possible to start the machine by accident. Always turn the main switch off, secure with a padlock and take possession of the key.

20.

The operator must ensure that hands and fingers are kept away from the danger zone of the upper cheek and the rails while the machine is running.

21.

The operator must ensure that he is out of the danger area of the swinging bending cheek before starting the bending cheek.

C A U T I O N !
The bending cheek swings forwards by approx. 32 inches.

22.

The operator must ensure that hands and fingers are out of the danger zone when the rear stop is in motion. Hands and fingers must be kept away from the area under the upper cheek as the blades of the rear stop move forwards into the gaps in the lower cheek. Risk of injury to hand and fingers.

23.

The operator must never leave the machine if it has not been disconnected from the electric system.

The main switch on the switchgear cabinet must be turned off (position 0) and secured with a padlock. Furthermore, the operator must take possession of the padlock key.

24.

The machine must not be used when it is due for servicing.

25.

The operator must look out for any accidental hazards which may occur.

26.

The user must ensure that the working area at and around the machine is kept clean and tidy by means of appropriate instructions and checks.

27. ATTENTION!

Wherever necessary, the user must ensure that the operating personnel wear protective clothing - e.g. gloves, safety shoes etc.

28.

Machines with only one foot switch may only be operated by one person.

Machines with two foot switches may only be operated by 2 members of staff after the "2-person operation" safety control system has been switched on. There must be a foot switch for each operator (refer to Section 7.1 "2-PERSON OPERATION USING FOOT SWITCHES").

29.

The machine may only be lifted for transportation at the appropriate points - in accordance with the enclosed drawings - "CRANE SUSPENSION - MACHINE WITHOUT REAR STOP", "CRANE SUSPENSION - MACHINE WITH REAR STOP" and "CRANE SUSPENSION - STOP". Safety aspects do not allow the machine to be lifted and transported at any other point.

The lifting ropes used must have an adequate lifting capacity and must be safe for such applications (machine weight, refer to Section 1.1 "RATINGS").

30. ATTENTION!

Once the machine has been installed, aligned and secured, the transport suspension hooks must be removed under all circumstances prior to commissioning. The hooks and fastening screws should be kept safely as they may be required if the machine is moved or relocated.

The plugs, supplied with the machine, must be pressed into the threaded holes for the suspension hooks in the upper cheek.

31. ATTENTION!

Warning and instruction notices on the machine must be read and understood before installation, connection to the electric system and commissioning.

32.

The machine must not be connected to the electric system or operated until the separate operating manual "CNC-COLOURGRAPHIC-CONTROLLER MULTIBEND 9000 for RAS 74.20-40", supplied with the machine, has been read and understood.

33. ATTENTION! **The machine must not be connected to the electric system before the enclosed safety information from the "SIEMENS" company has been read and understood.**

34. ATTENTION! **Warning and instruction notices on the machine must not be removed or covered.**

35. ATTENTION! **Any notices, fitted to the machine, which are damaged and illegible, must be replaced.**

Notes:

Notes:

3. RECEIVING INSPECTION, TRANSPORT, CLEANING, INSTALLATION AND COMMISSIONING

3.1. RECEIVING INSPECTION

The machine must be checked for completeness and any shipping damage immediately on arrival.

Any losses and/or shipping damage must be recorded in detail and confirmed as a factual report by the freight forwarder's signature, to ensure that the complaint is handled properly.

This factual report will then serve as a submission for insurance against damage or loss in transit.

Furthermore, should you have cause for complaint, please make contact with your dealer:

I.F.T., Inc.
1606 Barclay Boulevard
Buffalo Grove,
Illinois 60089
USA
Telephone: 708 - 465 - 1070

ATTENTION!

Read the operating manual, Section 3.2 "TRANSPORT" before unpacking the machine.

3.2. TRANSPORT

Special care must be taken when transporting the machine in order to prevent danger to life and limb, as well as damage caused by undue force or careless loading and unloading.

Any damage caused by the condensation of water, dampness or impacts must be prevented during transportation.

The machine may only be lifted at the appropriate points in accordance with the enclosed drawings - "CRANE SUSPENSION - MACHINE WITHOUT REAR STOP", "CRANE SUSPENSION - MACHINE WITH REAR STOP", "CRANE SUSPENSION - STOP" - for transportation. Safety aspects do not allow the machine to be lifted or transported by any other point.

The information contained in Chapter 3.5 "FITTING THE REAR PLATE STOP" must be observed with respect to "CRANE SUSPENSION - STOP".

The carrying capacity of the means of transportation must be adequately dimensioned with an appropriate safety allowance. Refer to Section 1.1 "RATINGS" for the machine's weight.

ATTENTION!

Oil may leak out of the tank if the machine is subjected to excesses rocking motion or tilting.

3.3. CLEANING THE MACHINE

In spite of all precautionary measures taken while preparing the folding machine for dispatch, dirt or foreign bodies may accumulate on the machine in transit and may cause considerable damage if the machine is not cleaned carefully.

ATTENTION!

It is essential that this is checked carefully and that any accumulated dirt or foreign material is thoroughly removed.

The dirt must not be removed with compressed air as this may cause the dirt to be transported into undesirable areas such as bearings, guides, spindles, etc.

The machine has been thoroughly coated with preservative in the factory and it is therefore necessary to remove the rust-proofing compound.

Use kerosene, white spirit or a standard solvent to remove the rust-proofing compound (preservative).

Caution - all of these agents are highly inflammable - fire and explosion hazard.

ATTENTION!

Paint thinners may not be used under any circumstances as these may attack the paint finish.

The machine must be cleaned thoroughly before it is connected to the electric system and put into operation.

The machine must not be connected to the electric system while cleaning off the transport dirt and rust-proofing compound.

The main switch on the switchgear cabinet must be turned off (position 0) and secured with a padlock. The member of staff responsible for this work must take possession of the padlock key.

3.4. INSTALLING THE MACHINE

ATTENTION! **The machine must be directly anchored to the concrete floor.**

The concrete floor must be adequately dimensioned to ensure that the machine's weight is accommodated with an adequate degree of safety (refer to Section 1.1 "RATINGS" and the enclosed foundation plan for the machine's weight).

The folding machine must be installed in accordance with the enclosed foundation plan.

— Refer to the foundation plan for the recommended dimensions of the holes in the concrete floor, accommodating the fastening bolts to anchor the machine.

— The fastening bolts to anchor the machine and the steel plates for its alignment are not included in our scope of delivery - these must be provided by the client. It is advisable to obtain these fastening bolts and steel plates before the machine is installed.
The enclosed drawing "EXAMPLES OF FLOOR ATTACHMENT" shows various acceptable alternatives for the fastening bolts.

— The fastening bolts should have a 5/8-11 thread with nuts and washers (refer to the enclosed drawing "EXAMPLES OF FLOOR ATTACHMENT").

— A quick-drying cement of sufficient stability must be used to seal in the fastening bolts. This cement must be supplied by the client.

— Any questions related to the fitting and installation of the machine must be directed to:

I.F.T., Inc.
1606 Barclay Boulevard
Buffalo Grove,
Illinois 60089
USA
Telephone: 708 - 465 - 1070

ATTENTION! **At stop depths of 3050 mm and more, the extension frame is supported by spring-cushioned legs in order to reduce the weight.**

ATTENTION! **Installing the machine pay attention to place the supporting leg to the right position under the extension frame, and to fix it to the ground.**

ATTENTION! **At first turn the adjusting screw upwards until reaching the extension frame.**

ATTENTION!

Then turn the adjusting screw further upwards by 1/4" in order to achieve the necessary supporting power of the spring-cushioned leg.

ATTENTION!

Secure the adjusting screw by fixing the counternut.

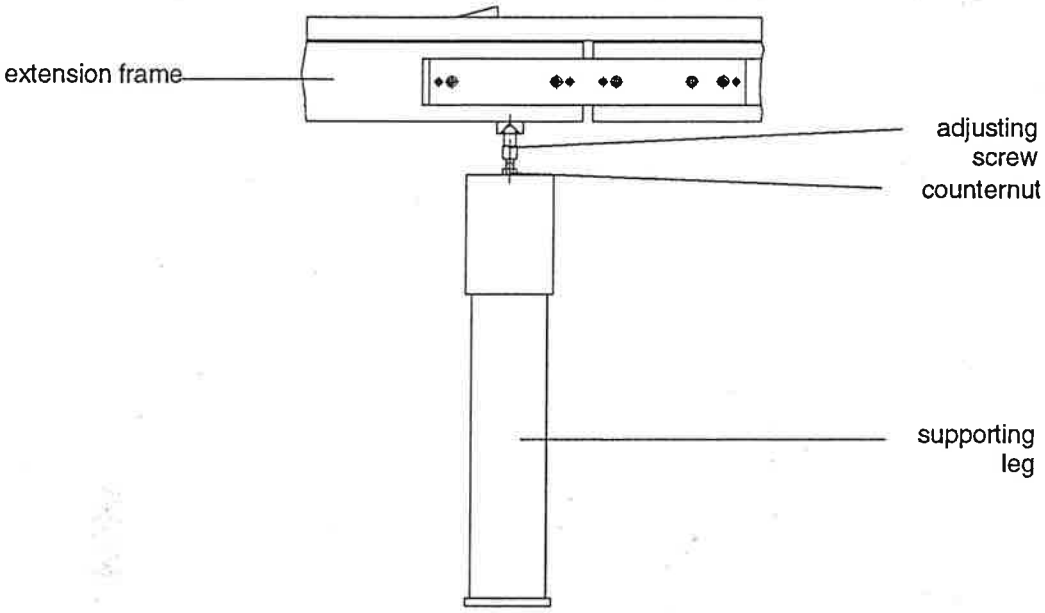

ATTENTION!

The oil level in the tank must be checked (refer to Section 4.3.1 "OIL CHANGE").

The control panel with boom has been dismantled for transportation.

The main electric supply line from the mains to the switchgear cabinet may only be connected after the control panel with boom has been fitted and after the loose electrical cables for the control panel have been connected (refer to Section 5.2 "MAINS CONNECTION").

When working inside the switchgear cabinet, the main switch must always be turned off and secured with a safety lock before opening the switchgear cabinet. The member of staff responsible for this work must take possession of the key to the safety lock. The main supply line from the mains to the switchgear cabinet must always be deenergized. Care must be taken to ensure that the main supply line cannot be switched on during work. The responsible member of staff must satisfy himself that the supply line really is dead with a measuring instrument before starting work.

Any work on the electrical installation of the machine may only be carried out by an authorized electrician.

Once electrical installation work has been completed, the installed protective devices must be tested by an authorized electrician (e.g. earthing resistance).

FITTING THE CONTROL PANEL WITH BOOM

(Refer to the following figures)

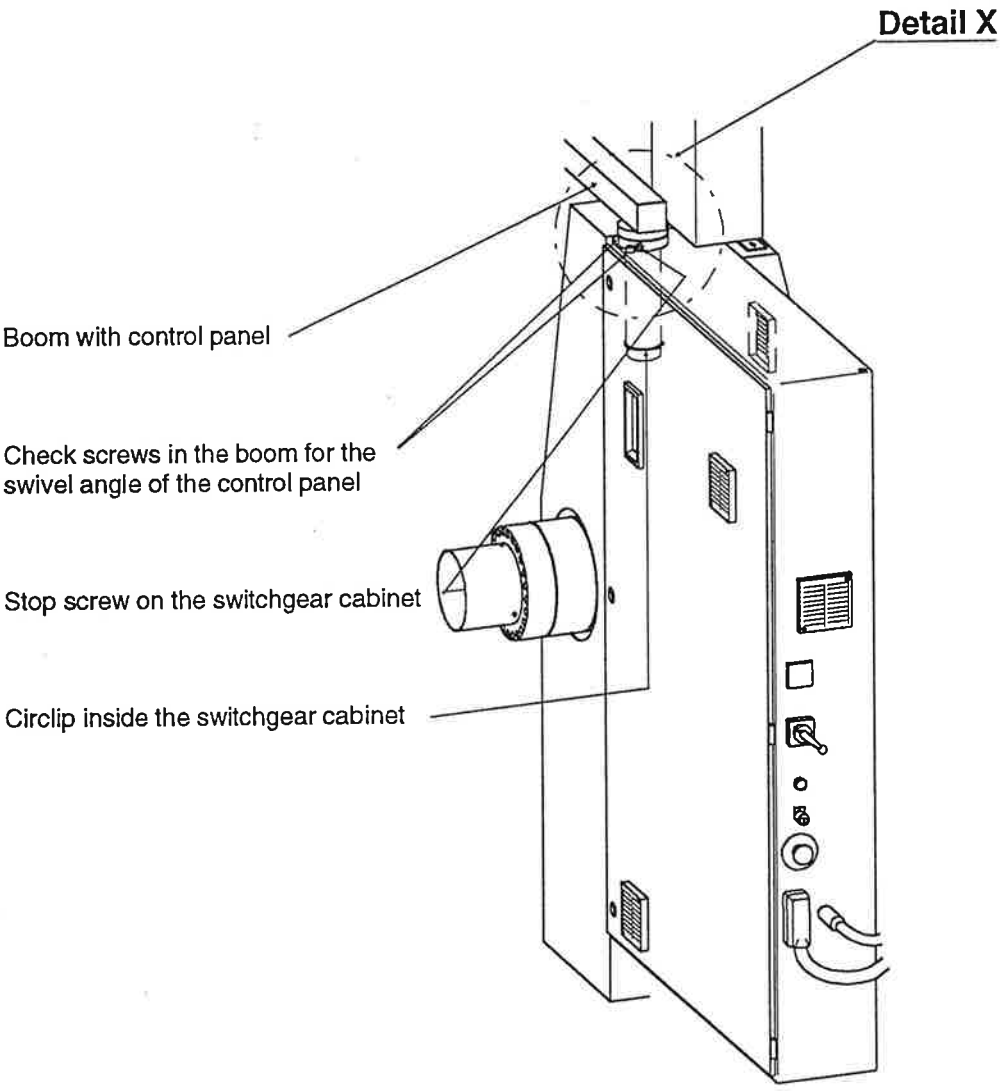

Figure for detail X

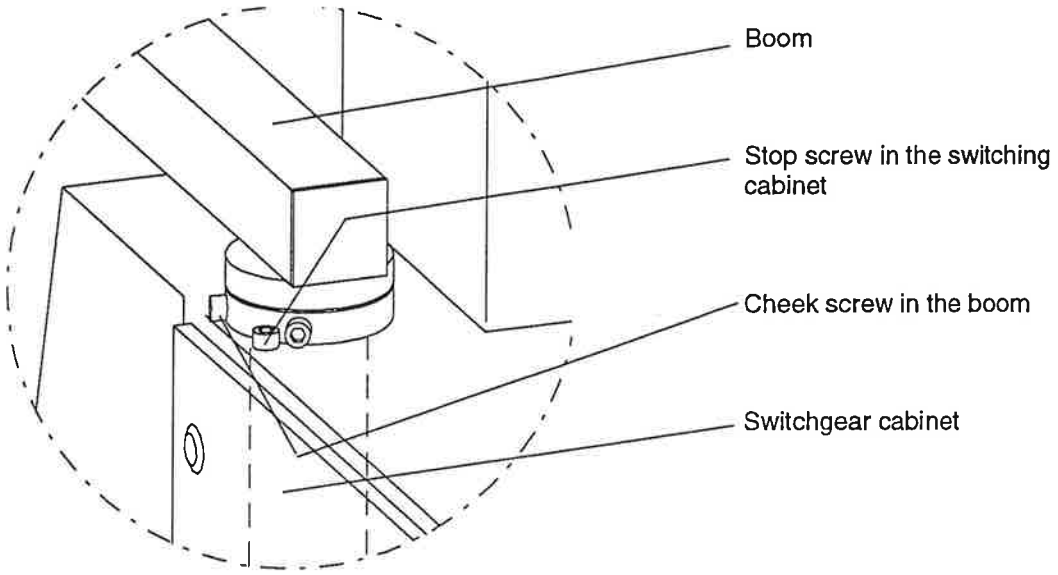

To assemble, insert the guiding tube, welded onto the boom, into the top panel of the switchgear cabinet and secure it in axial direction with the respective circlip inside the switchgear cabinet (refer to the previous figure and "Detail X").

ATTENTION!

The boom must be fitted in such a way that the stop screw in the switchgear cabinet is located between the two check screws on the boom. This arrangement is necessary for safety reasons, to ensure that the control panel cannot be pivoted into the danger zone of the swiveling bending cheek (refer to the previous figure and "Detail X").

The loose electrical cables must be connected in the switchgear cabinet according to their designations (refer to the enclosed electrical installation diagrams). **Make sure that the grounding cable has been connected.**

Attention!

- Observe absolutely! -

The folding beam is fixed in its initial position by a transport-safety screw, in order to avoid its swivel movement during the transport.

Remove this screw prior to connect the machine electrically.

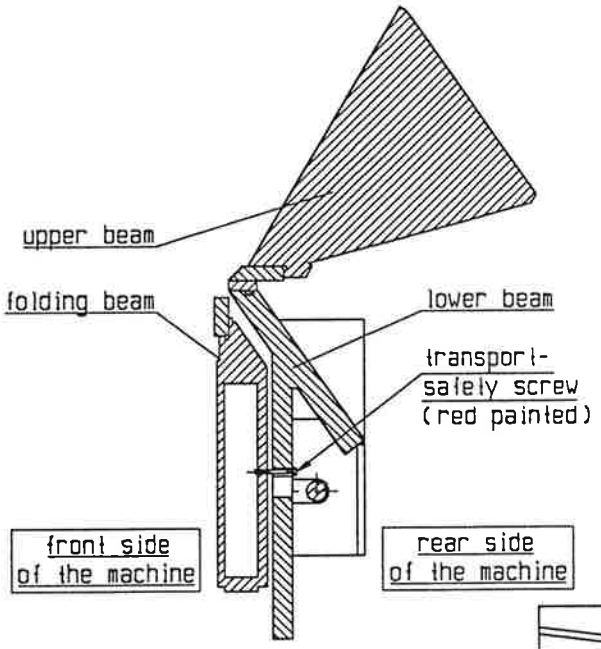

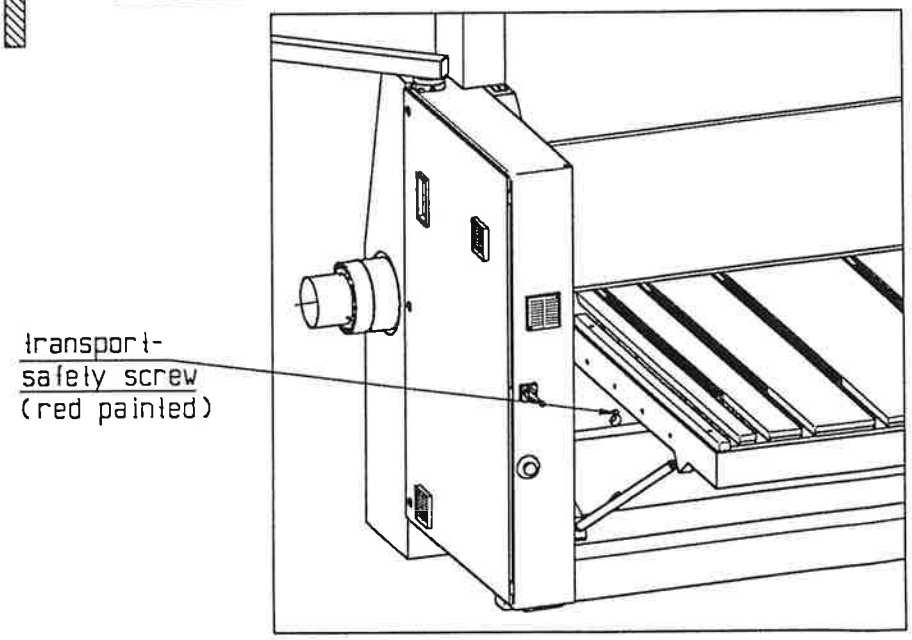

ATTENTION!

Refer to Chapter 5.2 "MAINS CONNECTION" to connect the main electrical supply line from the mains to switchgear cabinet.

Refer to "CNC-COLOURGRAPHIC-CONTROLLER MULTIBEND 9000 for RAS 74.20-40" for machine operation and activation.

The machine must not be connected to the electric system and not put into operation before the separate "CNC - COLOURGRAPHIC-CONTROLLER MULTIBEND 9000 for RAS 74.20-40" manual has been read and understood.

Chapter 2 "SAFETY" must have been read and understood before switching on.

Before aligning the machine, the upper cheek must be moved upwards by approx. 12 inches. For this, it is necessary to connect the folding machine to the electric system (refer to Section 5.2 "MAINS CONNECTION").

The upper cheek may only be moved upwards after the machine has been connected to the electric system and after the direction of rotation of the main drive motor (hydraulic drive) has been checked (refer to Section 5.2 "MAINS CONNECTION"). **Observe the safety directives in Section 5.1.**

Proceed as follows to raise the upper cheek.

— Turn the main switch on the rear panel of the switchgear cabinet to ON

— Check that CNC control is ready for operation.
Ready for operation when:

Pushbutton

in the control screen lights up and all other lamps are switched off. At the same time, both

softkeys

must be displayed on the monitor, accompanied by instruction texts.

— Turn on the keylock switch for the controller.

— Select the special service mode by means of the function softkey.

— Open the upper check by pressing the central foot switch pedal.
The upper check continues to move upwards as long as the pedal is pressed.

ATTENTION!

Two wooden blocks, approx. 12 inches long, must be used to prevent the upper cheek sinking (refer to Item 2.5 "OCCUPATIONAL SAFETY DIRECTIVES", Paragraph 18).

The machine must always be disconnected from the electric system again once the upper cheek has been secured against sinking.

The main switch on the switchgear cabinet must be turned off (position 0) and secured with a padlock. The member of staff responsible for this work must take possession of the padlock key.

The machine is delivered without built-in tools in the case of machines with automatic tool systems incorporating automatic clamping.

The upper cheek is closed for transport and rests on the two support screws. These support screws must be removed. To do this, open the upper cheek and move the hardwood supports

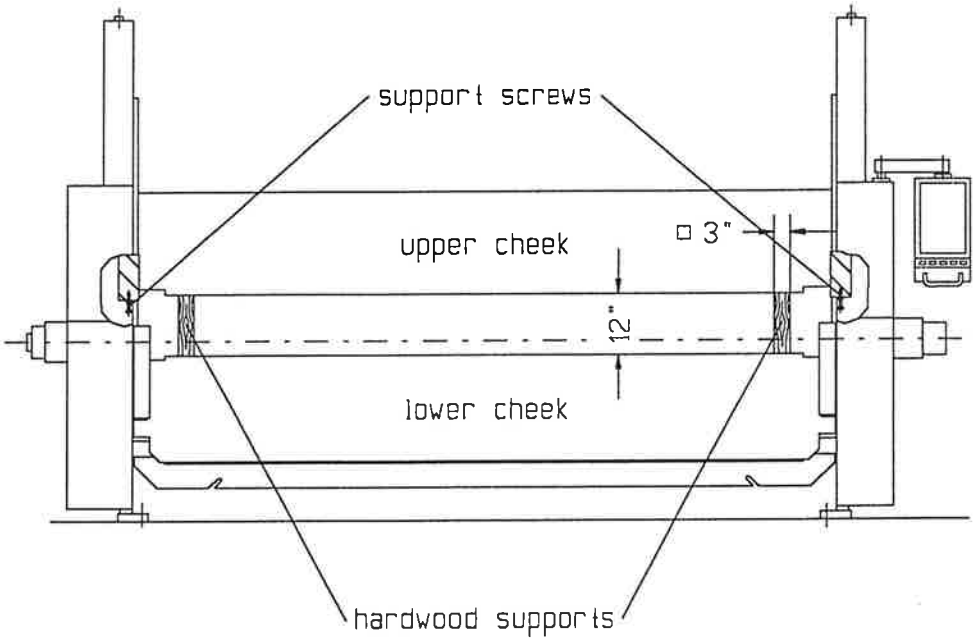

(approximately 3 inches x 3 inches x 12 inches long) to the left and right in the position shown in the drawing so as to secure the upper cheek against any lowering.

The support screws may only be removed when the machine is switched off.

This means that in addition to the machine control, the main switch in the control cabinet must also be switched off. Secure the main switch with a padlock whilst removing the support screws. The person authorized to perform this task must keep the key to the padlock on his person. The support screws must be removed when the machine is switched off. The main switch and the control can then be switched on with the key-operated switch. The upper cheek must be opened slightly. To do this, firmly press the left foot pedal of the foot switch downwards as quickly as possible beyond the pressure point into the "Upper cheek up" position so that the upper cheek opens a little further (see Section 5.2). The hardwood supports inserted to secure the upper cheek must then be removed again.

Great care must be taken in aligning the machine.

A steel plate, approx. 0.5 inches thick and 6 inches x 6 inches large must be fitted under each side-post foot plate, as a firm support for the adjusting screws. The machine is aligned with the adjusting screws, located in the side-post foot plate.

A spirit level (with the assistance of a tri-square) or a frame level can be used to check the alignment and is applied to the guiding surfaces of the upper-cheek guide (on the inside of the side post), as well as in the middle of the lower-cheek support (with the upper cheek opened by approx. 12 inches), aligning the machine exactly, both vertically and horizontally. The accuracy of the spirit level must be at least 0.0012 inches per 3 feet.

ATTENTION!

Particular care must be taken to ensure that the upper-cheek guides in both side parts are vertically identical on both sides.

Refer to the enclosed installation plan for the position of the spirit level.

Once the machine has been aligned, the fastening bolts are sealed in and the nuts tightened once the cement has hardened. The alignment of the machine must then be checked again and adjusted if necessary.

ATTENTION!

If the alignment procedure described above is not carried out, this will have a detrimental effect on the machine.

The bending-cheek bearings and the guides for the side posts and upper cheek may be damaged and wear prematurely. The bending accuracy may also be detrimentally affected.

Once the machine has been aligned, both hardwood blocks, used to prevent the upper cheek sinking, must be removed again under all circumstances before the upper cheek is lowered.

The machine must never be switched on before the operator has read and understood this instruction notice.

IMPORTANT!

THIS MACHINE SHOULD NEVER BE OPERATED OR MAINTAINED WITHOUT THE OPERATOR AND/OR MAINTENANCE INDIVIDUAL FIRST HAVING READ AND UNDERSTOOD THE SAFETY AND INSTRUCTION MANUAL PROVIDED WITH THIS MACHINE.

Do not remove or cover this sign !

154 909

Refer to "CNC-COLOURGRAPHIC-CONTROLLER MULTIBEND 9000 for RAS 74.20-40" for machine operation and activation.

3.5. FITTING THE REAR PLATE STOP

If the rear plate stop has been removed for transport (dispatch) because of the restricted space available, this must be fitted again before the machine is commissioned.

The separate plate stop is supplied standing vertical.

To prevent personal injury and damage to the plate stop, the stop must be unloaded in accordance with the enclosed depiction "CRANE SUSPENSION - STOP" - comprising two sheets. The instructions given in this depiction must be observed under all circumstances.

Two lifting ropes of the same length, with adequate carrying capacity, must be used to remove the stop from its container. Refer to Section 1.1 "RATINGS" for the weight of the stop. Avoid lifting the stop tilted.

The stop is taken out of its container in accordance with "ACTION 1" of the "CRANE SUSPENSION - STOP" depiction and lowered onto two wooden beams, at least 12 inches high and approx. 60 inches long, in accordance with "ACTION 2".

The stop is then carefully lowered from its vertical position into the horizontal set-down position in accordance with "ACTION 3". During this process, make sure that the drive motor is pointing downwards (towards the floor). When lowering, make sure that neither the drive motor nor the electrical terminal box makes contact with the floor at any point.

As the stop motor does not have a brake and the driving ball screw is not self-locking, the mobile part of the stop would start to move from a certain tilted position (from the horizontal to the vertical position), motivated by its own weight. In the interest of safety, this must be prevented by supporting the mobile part of the stop with a wooden block against the stop frame.

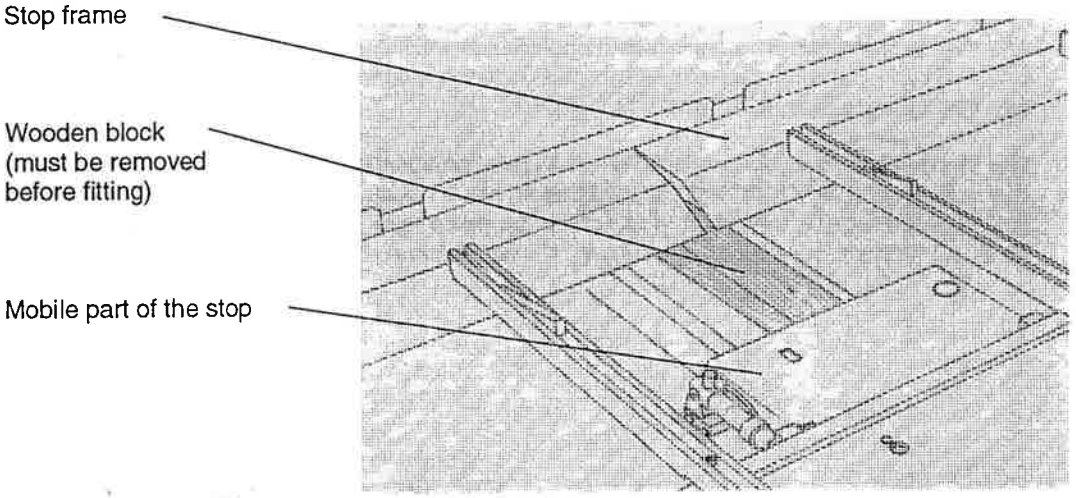

The plate stop must therefore only be suspended in such a way that the supported side of the stop is pointing downward. The wooden support must be removed before fitting the stop (when the stop is in the horizontal position) under all circumstances.

The machine must not be connected to the electric system and not operated before the separate "CNC-COLOURGRAPHUC-CONTROLLER MULTIBEND 9000 for RAS 74.20-40" operating manual, enclosed with the machine, has been read and understood.

The rear plate stop may only be fitted after the machine has been connected to the electric system, the direction of rotation for the main drive (hydraulic drive) has been checked, the machine has been aligned and secured.

The upper cheek must be moved upwards by approx. 12 inches to fit the stop.

Proceed as follows to raise the upper cheek.

— Turn the main switch on the rear panel of the switchgear cabinet to ON

— Check that the CNC control is ready for operation.
Ready for operation when:

Pushbutton

on the control screen lights up and all other lamps are switched off. At the same time, both

softkeys

must be displayed on the monitor, accompanied by instruction texts.

— Turn on the keylock switch for the controller.

— Select the special service mode by means of the function softkey.

— Open the upper check by pressing the middle foot switch pedal.
The upper check continues to move upwards as long as the pedal is being pressed. 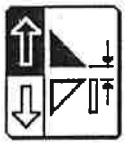

The raised upper cheek must be prevented from sinking by fitting two hardwood blocks, approx. 12 inches long (refer to Section 2.5 "OCCUPATIONAL SAFETY DIRECTIVES", Paragraph 18).

Once the upper cheek has been suitably secured, the machine must be disconnected from the electric system again under all circumstances.

The main switch on the switchgear cabinet must be turned off (position 0) and secured with a padlock. The member of staff responsible for this work must take possession of the padlock key.

The stop, now lying horizontal, is then raised with a crane.

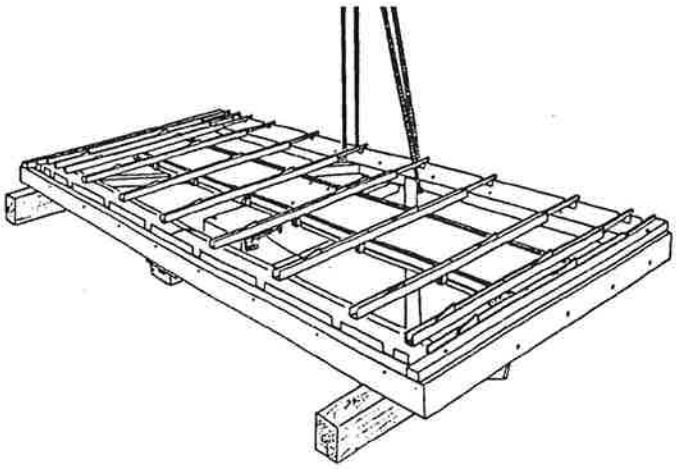

The two lifting ropes of the same length must be fitted to the stop as shown in the figure on the right. When lifting, always make sure that the stop is balanced to ensure that it does not tip to one side when raise

CAUTION!
Do not damage any pneumatic or electric lines or mechanical components.

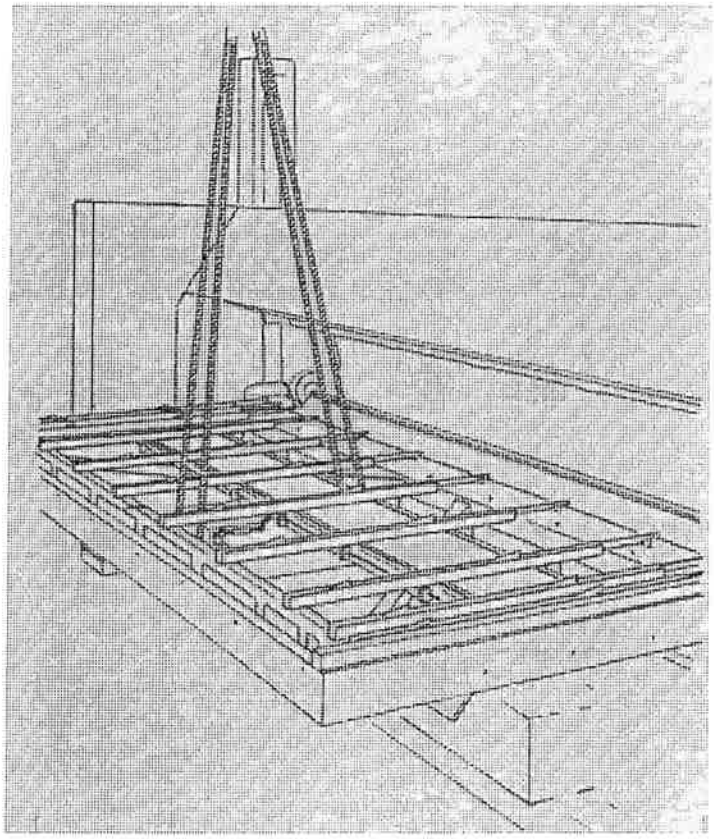

As shown in the figure on left, the stop must be inserted into the parallel retainers, screw-fitted to the lower cheek, from the rear (refer to the follo-wing figure).

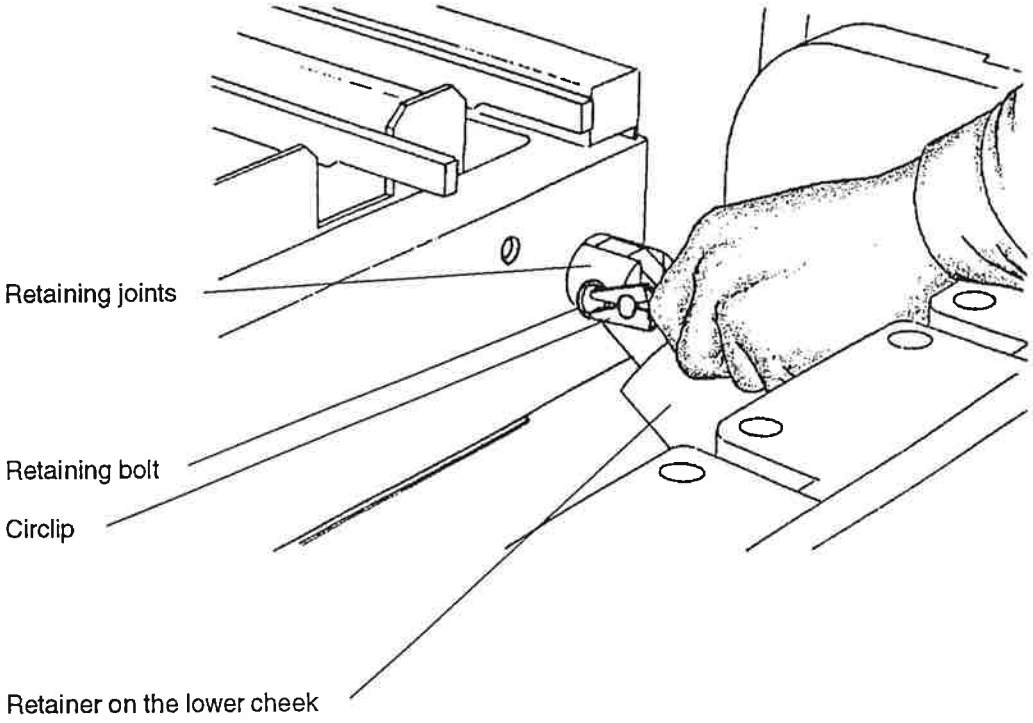

ATTENTION! bolts are inserted into the retaining joints and secured on both sides by two

The two support rods are then fitted into the retainers, provided on the lower cheek and the stop frame, and the stop is carefully lowered into place by the crane. The length of the support rods, which has been adjusted and fixed via hexagon locknuts, must not be altered in order to ensure that the stop's horizontal position remains unchanged.

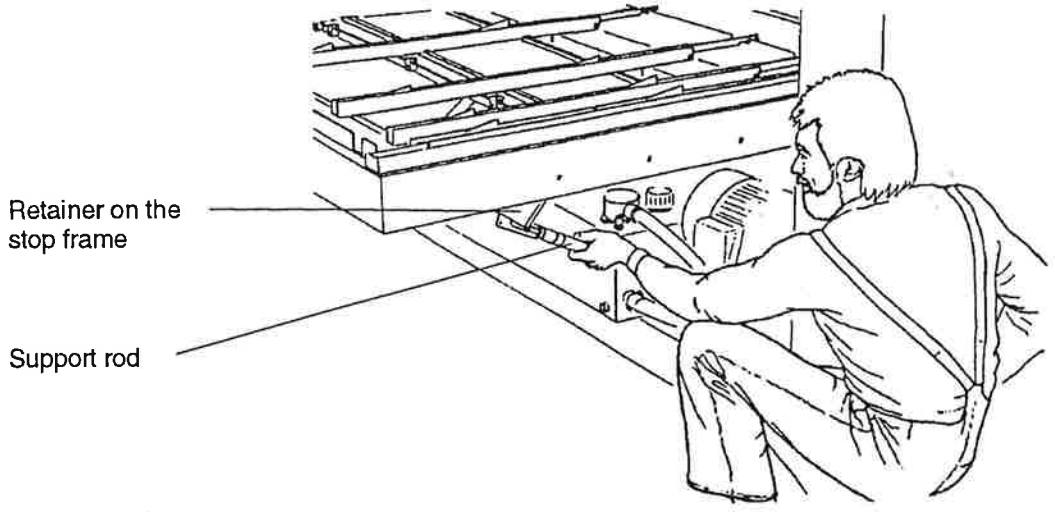

The respective support rods are color coded. When fitting these support rods, match these colors to the colors on the stop frame.

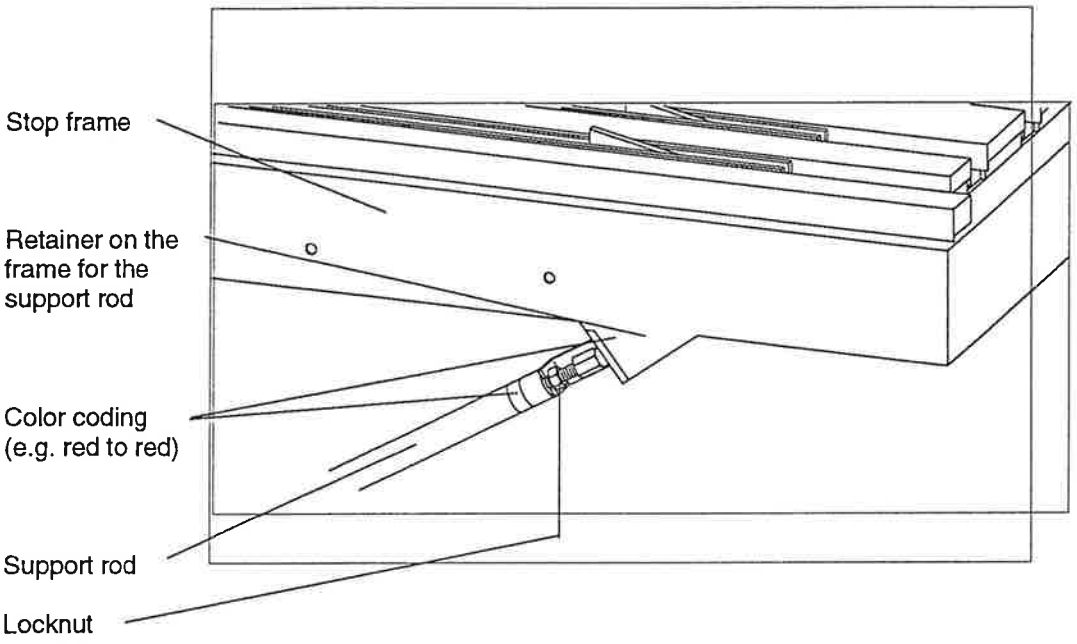

Before the stop is disconnected from the crane, the Ø 4 mm x 45 mm clamping sleeves supplied with the machine must be driven into the two retainers in the lower cheek to hold the two support rods. Make sure that the holes in the lower-cheek retainer are in line with those in the support rods.

On the stop-frame side, the two support rods must each be screw-fitted to the retainers in the frame with 2 M6 x 10 mm fastening screws, supplied with the machine (refer to the following figures).

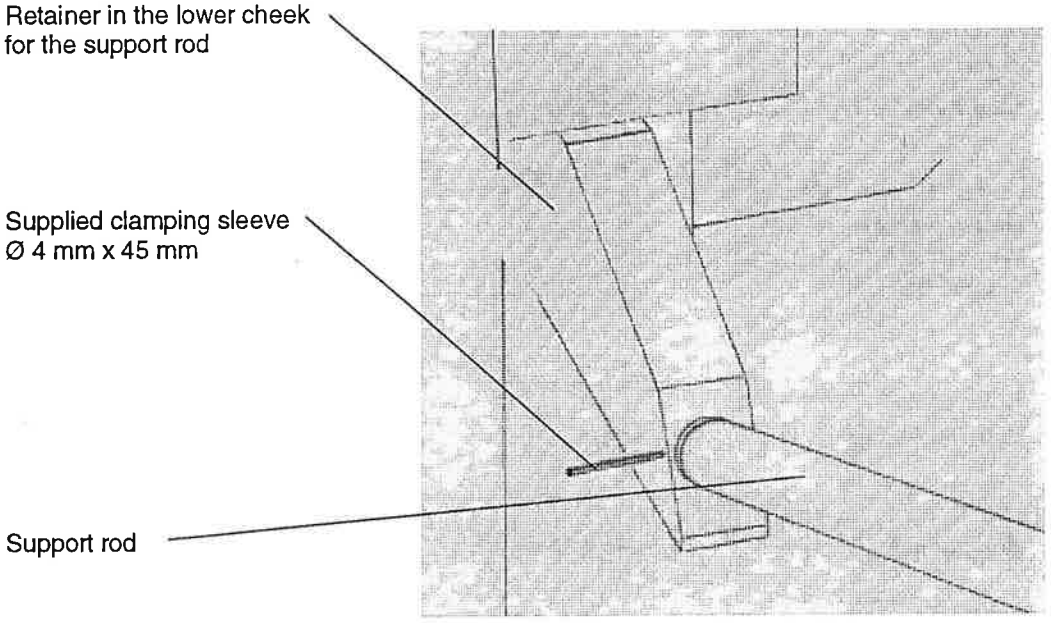
Retainer in the lower cheek for the support rod
Supplied clamping sleeve Ø 4 mm x 45 mm
Support rod

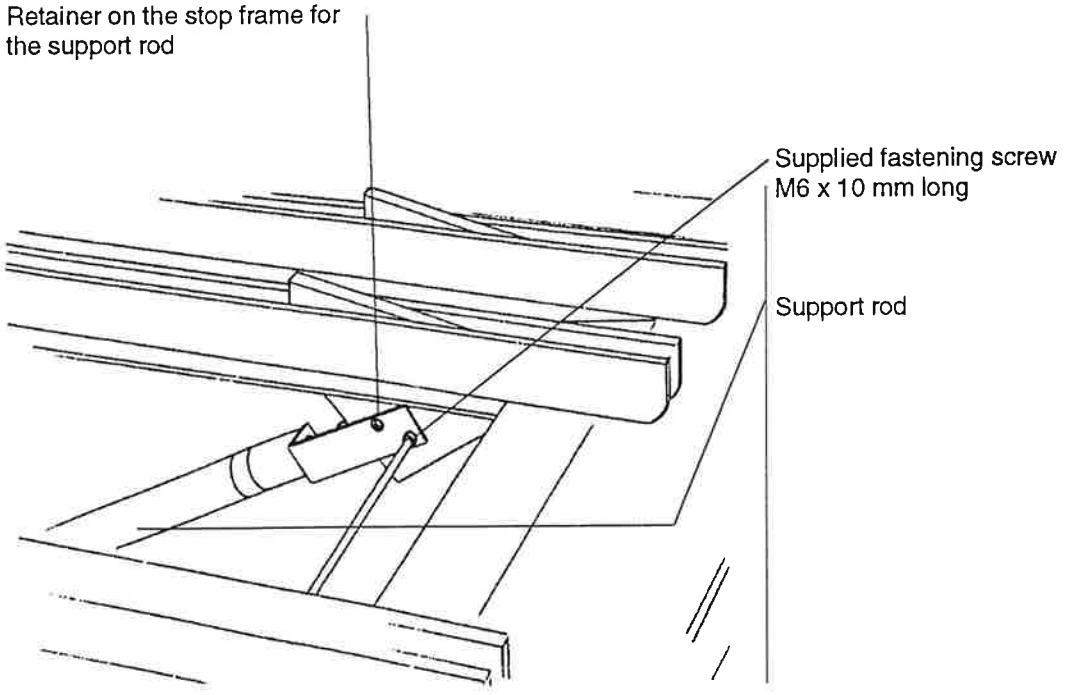
Retainer on the stop frame for the support rod
Supplied fastening screw M6 x 10 mm long
Support rod

The stop may be released from the crane once these measures have been carried out.

As the length of the support rods has been fixed by means of locknuts, the stop's horizontal position has been restored.

The compressed air-conditioner, supplied with the machine, must be fitted in accordance with the following figure. To do this, undo the two fastening screws in the stop frame, fasten the conditioner to the frame with the retaining bracket and these screws, and connect up the compressed air hose (color coded).

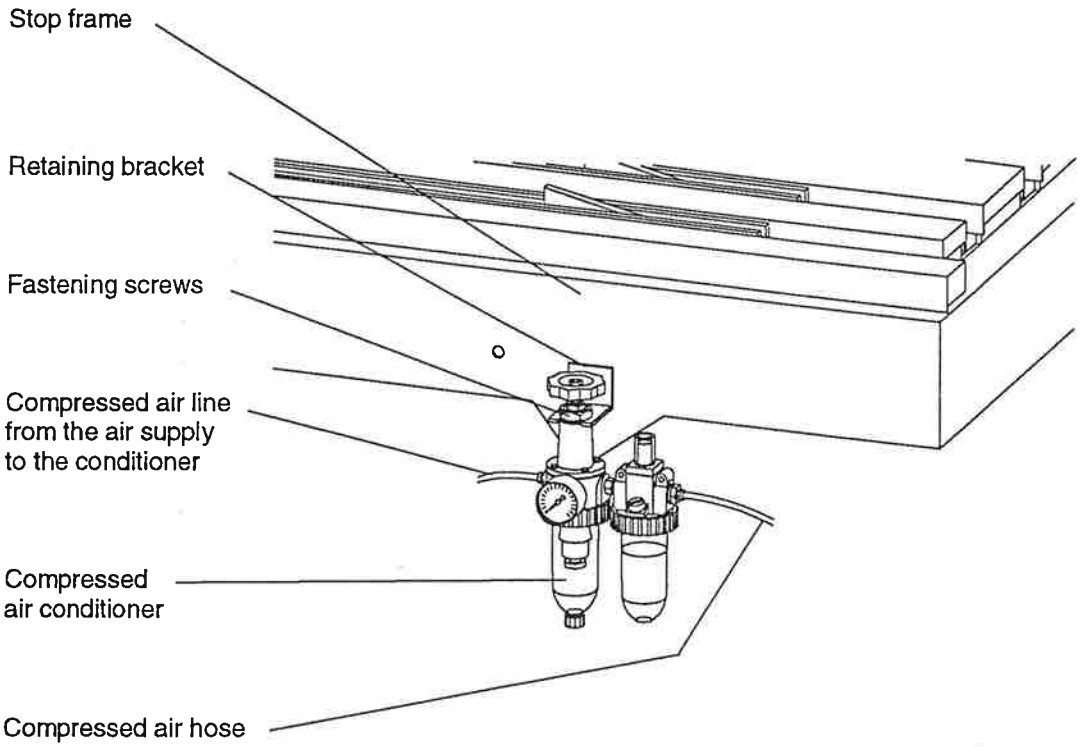

A compressed air line with a minimum nominal diameter of 0.23 inches must now be laid from the compressed air supply to the conditioner. This air line is not included in our scope of delivery, it must be provided by the client. The air pressure at the conditioner must be set to 87 lb/in^2.

Both of the stop's electrical cables must now be connected to the plug-in connectors at the switchgear cabinet (refer to the enclosed drawing "SWITCHGEAR CABINET RAS 74.20-40"). Furthermore, the stop's electrical sensor cable must also be connected to the switchgear cabinet using the circular plug located under the stop.

Once the stop has been fitted, both of the hardwood blocks, which were inserted to prevent the upper cheek sinking, must be removed again.

It may be necessary to readjust the stop after it has been in transit (Item 7.2.9 "CORRECTING THE STOP DIMENSIONS" and Item 7.2.10 "PARALLEL POSITION OF THE STOP").

The table panels, which have been removed from the stop and supplied loose with the machine must be fitted to the stop according to their designations (numbers 1 to X - same number on the stop frame).

To do this, first place the table panels on the lower-cheek side of the stop, then, using the clips in the table panels, fit them into the stop frame, from top to bottom, at the end of the stop frame.

If the machine is used to bend parts which require a free area between the lower cheek and the stop, the table panels can be offset (1) to the rear (2) by approx. 8.6 inches by simply lifting the panels (refer to the following figure).

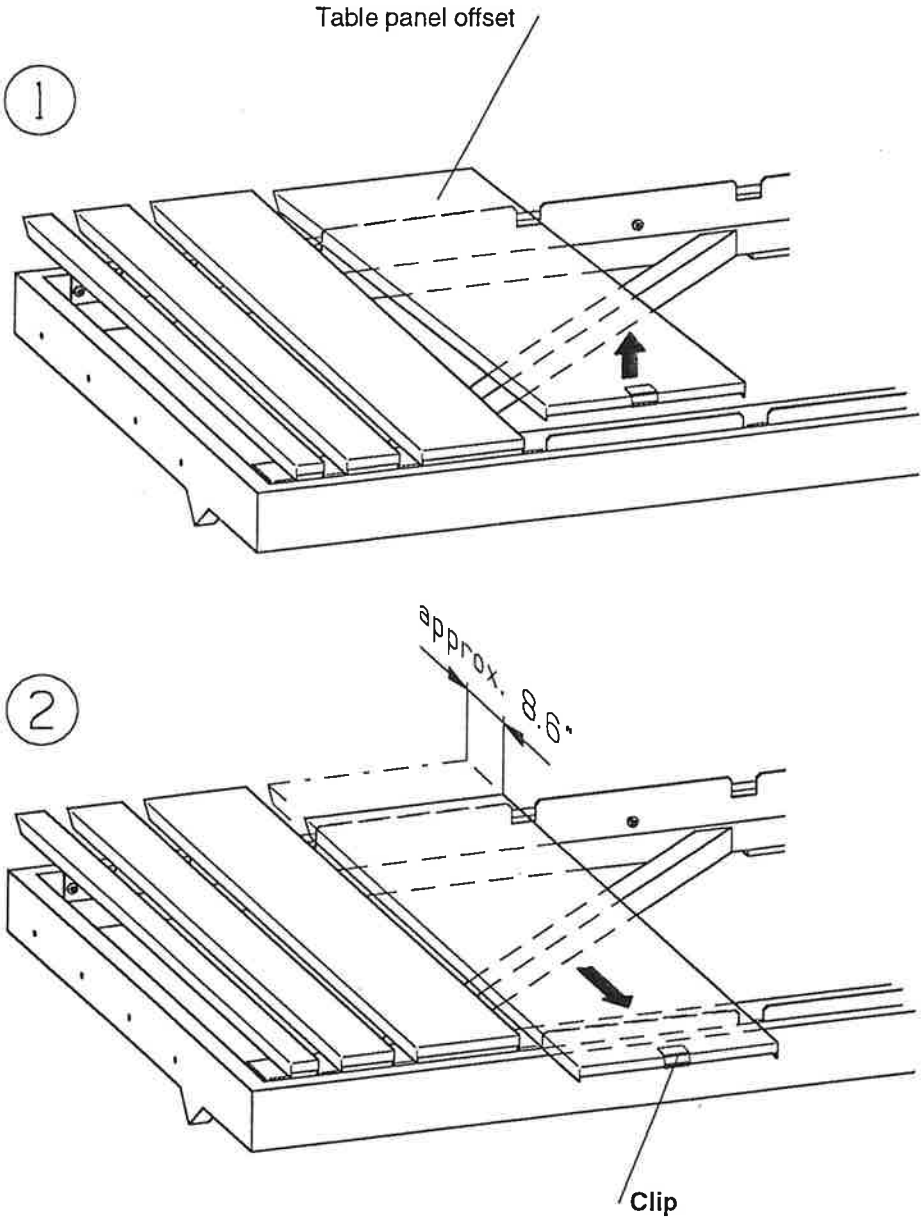

Notes:

4. MAINTENANCE

The machine must always be at a standstill before carrying out any maintenance work. The machine must be disconnected from the electric system prior to starting maintenance work. To do this, the main switch on the switchgear cabinet must be turned off (position 0) and secured with a padlock. The member of staff responsible for this work must take possession of the padlock key.

This notice, fitted to the machine, must be complied with before any maintenance work is carried out.

IMPORTANT !

THIS MACHINE SHOULD NEVER BE OPERATED OR MAINTAINED WITHOUT THE OPERATOR AND/OR MAINTENANCE INDIVIDUAL FIRST HAVING READ AND UNDERSTOOD THE SAFETY AND INSTRUCTION MANUAL PROVIDED WITH THIS MACHINE.

Do not remove or cover this sign !

154 909

4.1. NOTES

The directives listed in Section 2 "SAFETY" must be observed for all maintenance operations.

— Malfunctions caused by inadequate or incompetent maintenance work can incur very high repair costs and long downtimes for the folding machine. Regular maintenance is therefore indispensable.

— Operational safety and the service life of the folding machine depend on proper maintenance - as well as several other factors.

ATTENTION!

In other aspects, the separate "SIEMENS Servomotors 1 HU 305 and Tachogenerator 1 HU 1052" operating instructions, as well as the "Installation and operating instructions for RIEGELER conditioners" must also be observed (refer to the Annex to this operating manual).

ATTENTION!

It is prohibited to remove the lead seals from the pressure relief valves in the hydraulic system or to make adjustments of any kind.

4.2. LUBRICATION

— Careful lubrication is absolutely vital for trouble-free operation of the folding machine and precludes expensive repairs. This applies in particular to the proper lubrication of the ball screws on the rear plate stop and to the two worm gears, used to adjust the bending cheek.

— The machine must always be disconnected from the electric system for lubrication and all work associated with lubrication - turn off the main switch and secure with a safety lock.

— Refer to the enclosed "LUBRICATION INSTRUCTIONS" and the "LUBRICATION CHART - FACTORY DESIGNATION" for the greasing intervals, quantities and types of lubricant for each greasing point.

— Use only non-fibrous cleaning cloths when working on the hydraulic system, to ensure that no fibers can get into the machine.

— Lubricants, such oils and greases, must be kept in clean, closed containers, to keep out dust and moisture and to reduce exposure to air and the associated oxidation effect to a minimum. The storage area must be dry and cool.

4.3. CHECKING THE OIL LEVEL, CHANGING THE OIL, REPLACING THE FILTER

The machine must always be disconnected from the electric system for this. The main switch on the switchgear cabinet must be turned off (position 0) and secured with a padlock. The member of staff responsible for this work must take possession of the padlock key.

4.3.1. CHECKING THE OIL LEVEL, CHANGING THE OIL

The hydraulic system receives its supply from a 21-gallon oil tank, fitted to the cross member on the rear side of the machine.

The oil level must be checked through the inspection glasses with min. and max. markings before commissioning and once a week, particularly after the machine has run for the first time when all pipes and cylinders are filled with oil. The oil must be topped up if necessary.

The oil must be changed once a year if the machine is used for single-shift operation.

Hydraulic oil with detergent properties 45 cSt at 40° C / 104° F (refer to the lubricant chart in the Annex, factory designation "B") must be used. Only use clean, pure, uncontaminated oil.

For this purpose, remove the oil drain plug to empty the tank.

ATTENTION! **Observe the local regulations for the disposal of used oil under all circumstances.**

Oil from the machine at operating temperature can become very hot - risk of burning, e.g. if hot hydraulic oil is drained without control.

The tank must always be cleaned before filling with new hydraulic oil. The two cleaning apertures on the top panel can be used for this. New hydraulic oil must be poured in through a filler filter.

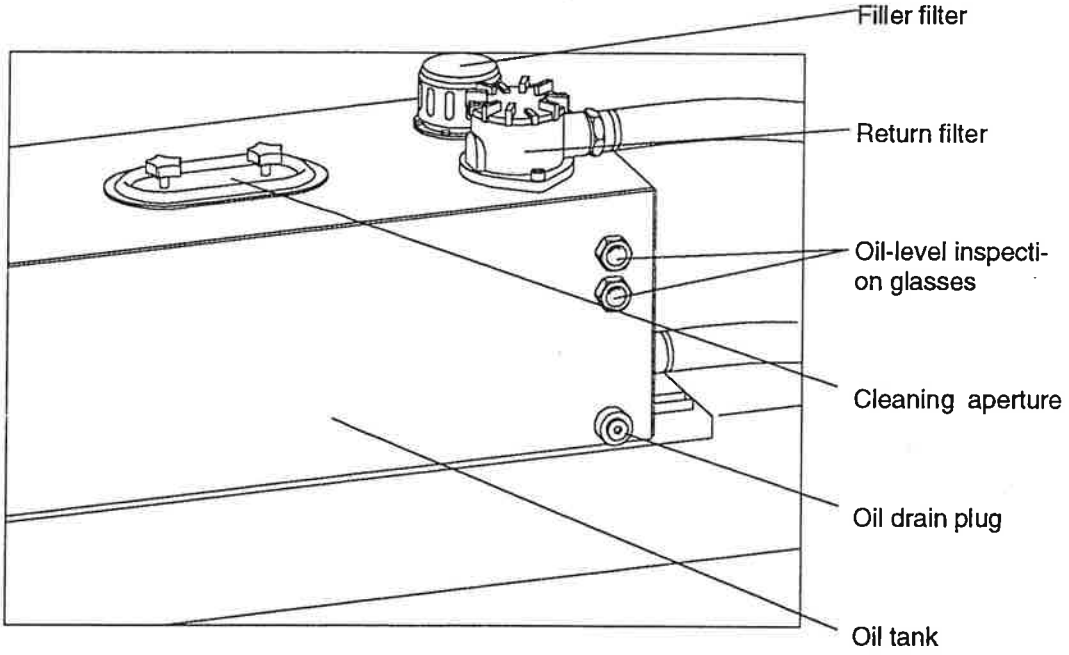

4.3.2. CHANGING THE FILTER

(return filter)

The filter insert in the return filter must be changed for the first time after 50 operating hours. Use the filter element included with the accessories for this.

After this, change the filter every 6 months if the machine is used for single-shift operation.

The cover must be removed from the return filter to change the filter insert. When doing this, make sure that the filter insert is installed in such a way that the compression spring points upwards.

Permanent magnets are sealed into the cover of the return filter. Any metal chips clinging to this magnet must be removed when the filter is changed.

The operating pressure for the hydraulic system has been adjusted and lead-sealed in the factory.

ATTENTION! **It is prohibited to remove the lead seals or to make any sort of adjustment.**

4.4. REPLACING THE FILTER MAT

(in the switchgear cabinet)

The filter mats in the switchgear cabinet ventilation system must be inspected regularly for dirt and replaced if necessary (refer to the enclosed drawing of the switchgear cabinet RAS 74.20-40). A replacement set of filter mats has been provided in the switchgear cabinet.

4.5. SERVOMOTOR

Refer to the operating instructions (SIEMENS) - servomotors 1HU3 05 and tachogenerator 1HU1 052 - enclosed in the Annex for information on the regular maintenance of the servomotor with tachogenerator - above all with reference to maintenance of the commutator, the carbon brushes and their replacement.

4.6. GENERAL TECHNICAL INFORMATION

1. If there is an obvious loss of oil - check the oil level in the tank at shorter intervals, top up with oil if necessary - determine the cause and remedy.

2. If it is necessary to change the type of oil or grease for technical or operational reasons, only choose the types and viscosities which are recommended in the "Lubricant chart - factory designation" in this operating manual.

3. When dismantling, e.g. covers or sealing plugs, pay attention to the sealing elements. Check all seals before installation carefully and replace if necessary.

4.

Check screw connections and pipelines. Tighten leaky screw connections or plugs when the system is depressurized only. Do not repair damaged pipes, replace them. Replace hydraulic hoses immediately if any damage, signs of age or moisture penetration become apparent. Use original spare parts from the machine manufacturer only.

Remedy any leaks in the pipeline system as soon as possible - CAUTION depressurize the system and switch off the machine before starting work (refer to Section 4.3).

5. Clean all contact surfaces before assembling. Check connections for leaks following installation.

6. Check fastening and securing components, e.g. screws, nuts, lock washers and washers etc. prior to reassembly and replace if necessary.

7. Clean the lubricating nipple before applying the grease gun, then grease.

8. Apply a film of oil or grease to all blank metal machine components at regular intervals to prevent corrosion damage.

9. Replace faulty parts in good time in order to avoid more serious damage.

10. Replacement assemblies have the same maintenance schedules as the units which they are replacing.

11. **Replace all protective devices properly after maintenance work has been completed.**

12. ATTENTION! **Observe the environmental protection regulations when disposing of oil, grease, cleaning agents or components containing oil (e.g. oil filters).**

13. **Service and repair work may only be carried out by authorized personnel.**

Notes:

5. ELECTRICAL EQUIPMENT

ATTENTION!

Also refer to the separate "CNC-COLOURGRAPHIC-CONTROLLER MULTIBEND 9000" for RAS 74.20-40.

5.1. SAFETY DIRECTIVES

1.

Work on the electrical installation of the machine may only be carried out by an authorized electrician.

2.

Electrical hazard - misuse or incompetent installation work carried out on the machine may lead to electric shocks, injury or death.

The installation must comply with the "National Electric Code" (Article 250 - ground etc.).

3.

The machine must not be connected to the electric system or operated before this operating manual has been read and understood, particularly Chapter 2 "SAFETY".

The separate "CNC-COLOURGRAPHIC-CONTROLLER MULTIBEND 9000" operating instructions must also have been read and understood beforehand.

The separate "SIEMENS safety information", supplied with the machine, must also have been read and understood beforehand.

ATTENTION!

The warning and instruction notices, attached to the machine, must have been read and understood before the machine is connected to the electric system. Particular attention must be given to the notice on the switchgear cabinet door.

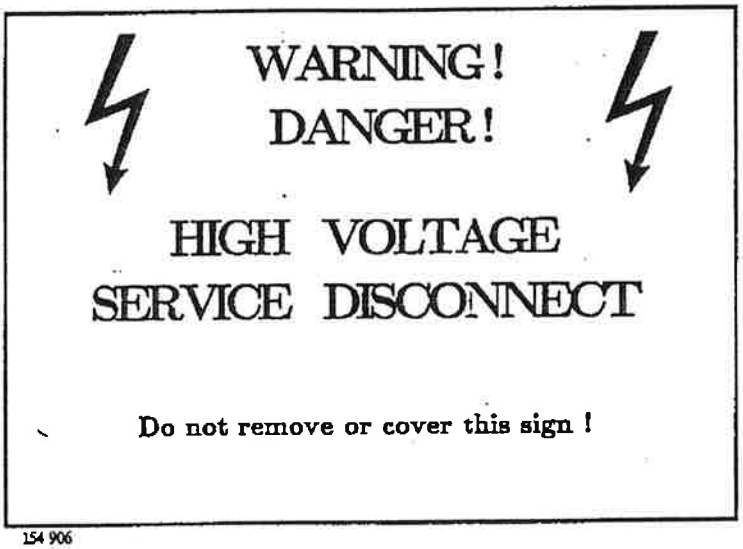

154 906

5.2. MAINS CONNECTION

All electric cables have been installed so that it is only necessary to connect the main electric supply line from the mains to the switchgear cabinet (refer to the enclosed architectural diagrams). The electric cables from the control panel to the electronic system and the controller must first be connected in the switchgear cabinet, according to the designations, under all circumstances (refer to Chapter 3.4 "INSTALLING THE MACHINE" "FITTING THE CONTROL PANEL WITH BOOM").

Furthermore, the main electric supply line from the mains to the switchgear cabinet must be deactivated. Care must be taken to ensure that the main supply line cannot be activated during work. The member of staff responsible for this work must satisfy himself that the supply line really is dead, with a measuring instrument, before starting work.

The main switch must be turned off and secured with a padlock. The authorized electrician must take possession of the padlock key.

The main electric supply line must first be connected to line terminals L1, L2 and L3 in the switchgear cabinet, then to the grounding terminal PE of terminal strip X1 (refer to the enclosed architectural diagrams). The yellow terminal shrouding, covering terminals L1, L2 and L3 must be removed by undoing the screws beforehand and must be replaced immediately once these terminals have been connected.

ATTENTION!

As it is possible for terminals in the switchgear cabinet to become loose in transit, all terminals in the switchgear cabinet must be checked and tightened if necessary.

ATTENTION!

Before connecting the machine to the mains, check that the operating voltage and frequency quoted on the switchgear cabinet rating plate agrees with the local mains voltage and frequency.

The system may only be connected to the mains after the main electric supply line has been connected in the switchgear cabinet.

ATTENTION!

Once the machine has been connected to the mains, use the rotary field measuring instrument to check the direction of the rotary field for the alternating current at terminals L1, L2 and L3.

The rotary field must rotate clockwise under all circumstances.

Change two phases if necessary.

The main switch and the main electric supply line from the mains to the switchgear cabinet must be deactivated under all circumstances before the phases are changed. Care must be taken to ensure that the main supply line cannot be activated during the work. The member of staff responsible for this work must satisfy himself that the supply line really is dead, with a measuring instrument, before starting work.

Now check the direction of rotation for the main drive motor (hydraulic drive).

Proceed as follows:

— Reactivate the main supply line.

— Turn the main switch on the rear panel of the switchgear cabinet to ON.

— Check whether the CNC control is ready for operation

Ready for operation when:

pushbutton on the control screen lights up and all other lamps are switched off. At the same time, both of the

softkeys

must be displayed on the monitor, accompanied by instruction texts.

— Switch on the keylock switch for the controller

and turn off again immediately with the pushbutton. 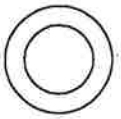

ATTENTION!

IMPORTANT:

Only switch on very briefly as the pump may be damaged if the direction of rotation is incorrect.

The direction of rotation must comply with the arrow shown on the motor (looking at the ventilator cowl, clockwise, to the right). If the direction of rotation is correct for the main motor, the direction of rotation will also be correct for all other motors in the system.

Before setting to work, due to eventual mains fluctuations, adjust the control-voltage 110V, at secondary winding in the range of +5% up to +10% (115V up to 123V).
(Measure at secondary winding of transformer, adjustment by means of changing terminals at primary winding).

5.3. FOOTSWITCH

The foot switch is equipped with a fail-safe control system with 3 pedals (refer to the figure, Section 5.3.1 "FUNCTION OF THE FOOT SWITCH").

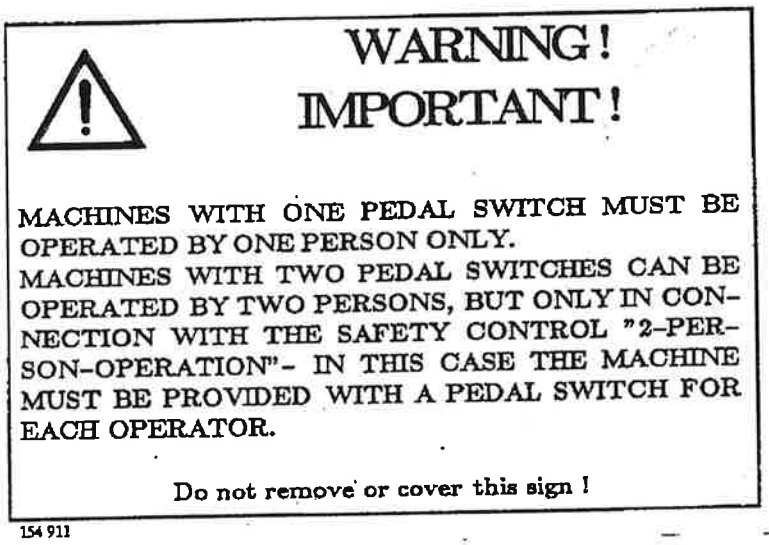

(Also refer to Section 8.1 "TWO-PERSON OPERATION USING FOOT SWITCH").

When closing the upper cheek (left-hand pedal, jogging mode), the upper cheek stops moving when the opening has been reduced to 0.32 inches. It is necessary to release the pedal and press the left-hand foot pedal once again to continue the closing movement (jogging mode) until the plate has been clamped.

The automatic stop facility for the upper cheek ceases to be effective if the opening is less than 0.32 inches.

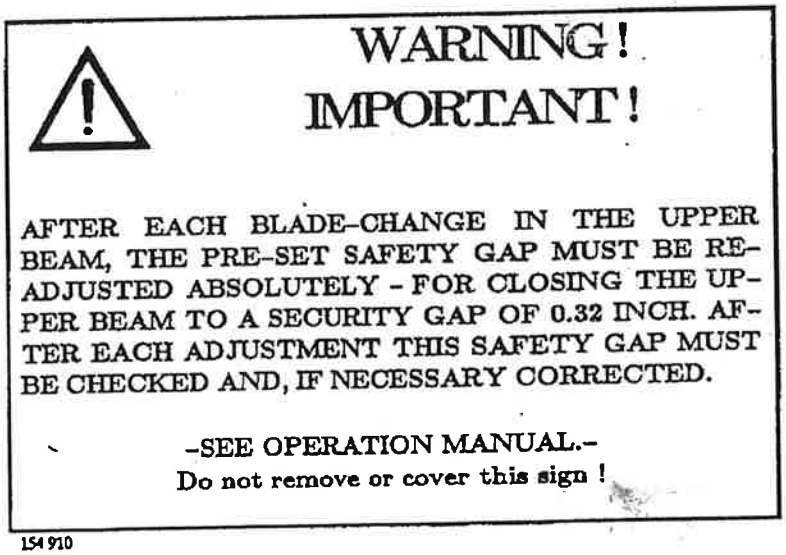

(Refer to Section 7.2.8 "REPLACING THE RAILS").

5.3.1. FUNCTION OF THE FOOT SWITCH

Foot switch	Function
Left-hand pedal	1. Closes the upper cheek Jogging mode to an opening width of 0.32 inches 2. If pressed again, upper cheek closes Jogging mode, until the plate has been clamped 3. EMERGENCY STOP during the bending process (only at execution with 1 foot switch)
Middle pedal	1. Opens the upper cheek Jogging mode 2. EMERGENCY STOP during the bending process (only at execution with 2 foot switches - 2-person-operation)
Right-hand pedal	Starts the automatic bending process (only effective if the upper cheek is closed firmly). Bending cheek up - bending cheek down - upper cheek up, to an opening width of 0.32 inches or to a higher adjustable value

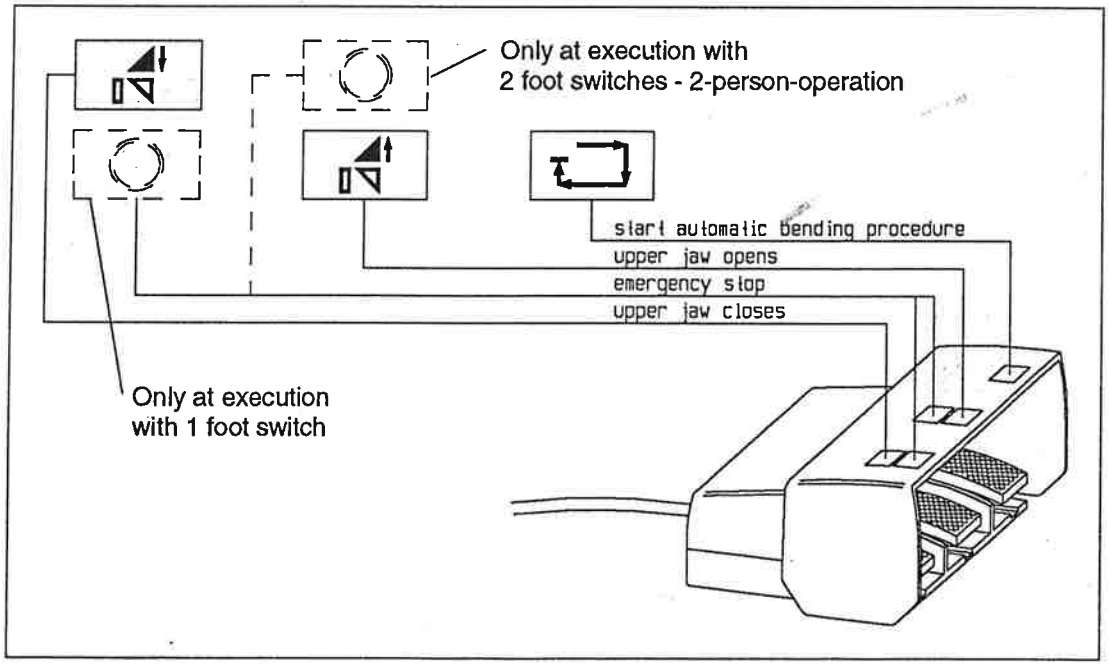

Never put your hand between the upper and lower cheeks while pressing the left-hand pedal.

Before pressing the right-hand pedal, make sure that nobody is in the danger zone of the bending cheek.

CAUTION: The bending cheek swings forwards by approx. 32 inches

Observe the instruction notice in the middle of the bending cheek.

154 905

If the left-hand pedal "EMERGENCY STOP" has been pressed during the bending process, there are the following possibilities:

— To restart the automatic sequence again by pressing the right-hand foot switch pedal

— To continue by pressing the pushbutton

— To leave the program by pressing the pushbutton

in order to return to the starting position immediately (to select a new operating mode), e.g. to change to jogging mode in which each individual cheek movement can be started separately.

5.4. OVERLOAD PROTECTION

The main motor is equipped with a termistor-type motor protection, which responds in the event of overheating (refer to the circuit diagram).

ATTENTION! **The drive unit may only be started again after the motor has cooled down following an overload.**

Notes:

6. WORKING WITH THE MACHINE

6.1. OCCUPATIONAL SAFETY DIRECTIVES

The machine may only be put into operation if the operator has been trained, is authorized, and has read and understood this operating manual, particularly Chapter 2 "SAFETY", as well as the separate "CNC-COLOURGRAPHIC-CONTROLLER MULTIBEND 9000 for RAS 74.20-40" operating instructions, supplied with the machine, and the "Siemens safety information".

All safety devices must be fitted before the machine is switched on.

The information plates, fitted to the machine, must have been read and understood before switching on.

The machine must be disconnected from the electric system before changing the rails. To do this, turn off the main switch on the switchgear cabinet and secure with a padlock. Always read Section 6.2.9 "REPLACING THE RAILS" in this operating manual beforehand.

The machine must always be at a standstill and disconnected from the electric system before any adjustment or maintenance work is carried out. Adjustment and maintenance work may only be carried out by authorized personnel.

Nobody is allowed behind the machine in the area of the stop while work is being carried out on the folding machine.

Care must be taken to ensure that nobody is in the swiveling range of the bending cheek while using the folding machine for bending work. The swiveling bending cheek is dangerous.

Operating personnel must never put their hands into the working area under the upper cheek while inserting the sheet-metal component or when aligning the part to be bent against the stop blades. The descending upper cheek is dangerous.

When bending short sides, the stop blades move into the cutouts in the lower-cheek rail. Danger of injury to fingers.

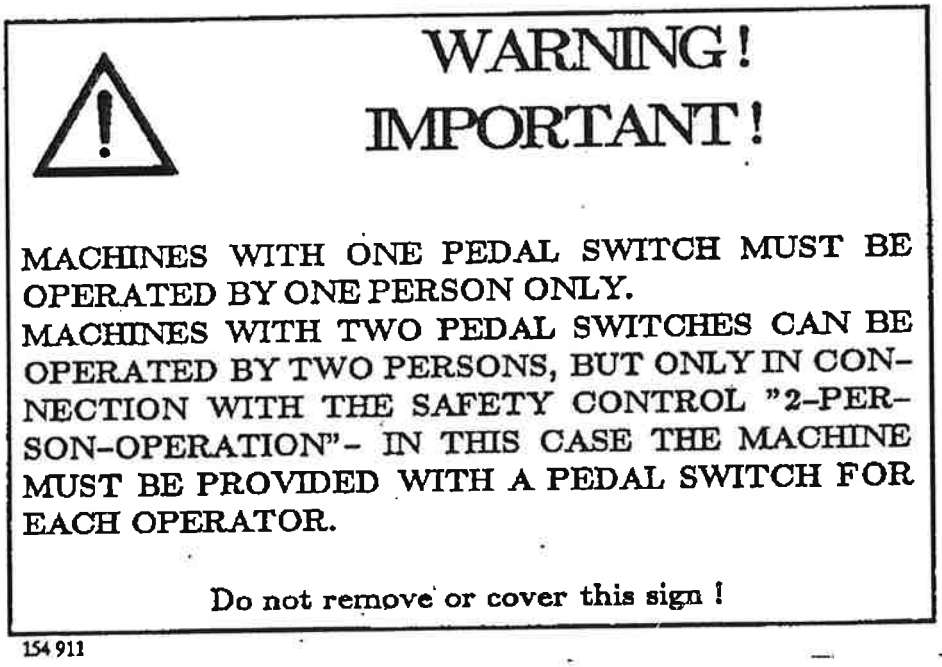

154 911

(Also refer to Section 7.1 "TWO-PERSON OPERATION")

6.2. WORKING DIRECTIVES

Compared with bending around a circular rail, bending work using an angle rail presupposes a number of different compromises. As there is not suitable bracing within the bending radius, which would support the radius, a certain amount of distortion is always produced in a certain area of the radius.

At the same time, if the bending cheek is closely adjusted, the point of application of force on the bending rail moves towards the point of rotation. The result is the leading leg effect.

Angle rails are used frequently in spite of this. The disadvantages - such as differences in angle and radius - are often more than compensated for by the costs of setting up and tools which would be necessary for a large number of different circular rails.

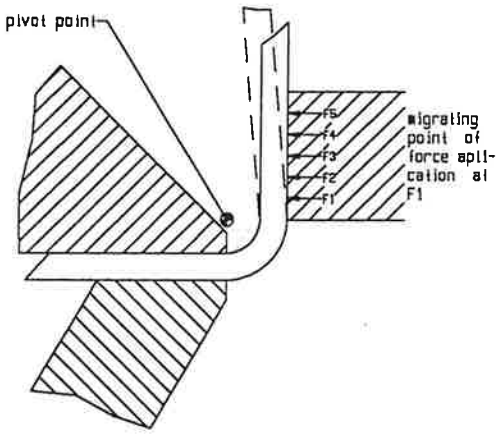

Free bending with angle rails

+ Same rail for various sheet thickness

- No bracing (radius distorted)

- Varying difference in bending angle between SETPOINT and ACTUAL for 30°, 90°, 120°

- Shifting point of application of force along the bending rail

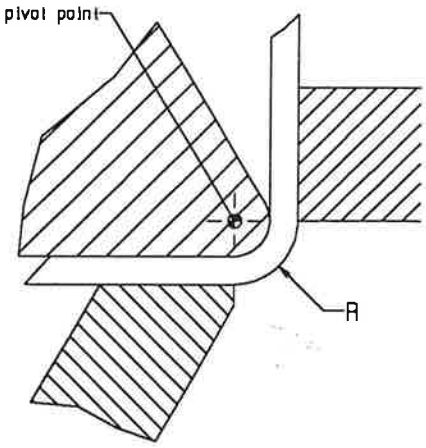

Bending around a radius

+ Best bending result on the radius

+ Virtually constant difference between SETPOINT and ACTUAL for 30°, 90°, 120°

- Frequent rail changes (set-up cost)

- High tool costs

Physical reasons dictate that there are always resiliences in a bent component, the size of which depends on the bending angle and which are determined by the material itself - and not by the machine.

6.2.1. FOLDING MATERIALS OF DIFFERENT LENGTHS

If metal sheets which are smaller than the working length of the machine are clamped on one side - either left or right - for folding, it is not vital to make sure that a narrow dummy sheet of the same thickness is inserted on the opposite side. The machine detects the degree of bracing by means of an internal measuring system and prevents the upper cheek closing any further. A subsequent bending process may be carried out. Once the upper cheek has been opened, the bracing is automatically compensated again. The same also applies to segmented retaining clamp rails, whereby a rail segment can be used in place of the dummy sheet.

ATTENTION!

Observe Section 6.1 "OCCUPATIONAL SAFETY DIRECTIVES" under all circumstances.

ATTENTION!

Danger of collision if special rails are used - take Section 6.2.3 "ADJUSTING THE SAFETY DEVICE FOR MAX. BENDING ANGLE" into consideration under all circumstances.

Observe Section 6.2.9 "REPLACING THE RAILS" under all circumstances.

6.2.2. AUTOMATIC FOLDING SEQUENCE

Precondition: "PROGRAM" operating mode with at least one program line.

When lowering the upper cheek, always ensure that there is no danger of personal injury.

Observe Section 6.1 "OCCUPATIONAL SAFETY DIRECTIVES" under all circumstances.

ATTENTION!

Observe Section 6.2.3 "ADJUSTING THE SAFETY DEVICE FOR MAX. BENDING ANGLE" under all circumstances.

ATTENTION!

Observe Section 6.2.9 "REPLACING THE RAILS" under all circumstances.

Press the left-hand foot switch pedal - jogging mode. The upper cheek closes and stops moving when the opening has been reduced to approx. 0.32 inches - protective circuit.

After releasing the pedal, press the left-hand pedal again to continue closing the upper cheek (jogging mode) until the sheet has been clamped.

The closing process can be interrupted at any stage of the jogging sequence by releasing the left-hand pedal.

After clamping the upper cheek, trigger the automatic bending sequence by pressing the right-hand foot switch pedal, i.e. the bending cheek swings upwards until it has reached the set bending angle for the current program section.

The machine switches over, the bending cheek swings back into its original position and the upper cheek opens to an opening of approx. 0.32 inches or a higher adjustable value.

The automatic sequence can be interrupted at any time by pressing the left-hand foot switch pedal (refer to Chapter 5.3.1 "FUNCTION OF THE FOOT SWITCH"). If an automatic sequence has been interrupted in this way, it can be resumed again by pressing the right-hand foot switch pedal.

Once the automatic bending sequence has been triggered, the bending cheek swivels down automatically after the entered bending angle has been reached. Always make sure that nobody is in the danger area.

CAUTION: The bending cheek swings forwards by approx. 32 inches.

6.2.3. ADJUSTING THE SAFETY DEVICE FOR MAX. BENDING ANGLE

Always read Chapter 6.1 "OCCUPATIONAL SAFETY DIRECTIVES" before changing the rails.

ATTENTION!

Every time the upper-cheek rail has been changed, the bending angle limiter must be readjusted to the new rail. To do this, undo the knurled set collar (refer to the figure) by turning to the left.

ATTENTION!

The max. adjustable bending angle for angle rail is

180° minus rail angle

e.g. angle rail 30°

Max. bending angle: 180° - 30° = 150°

The graduated collar with graduations up to 180 can now be set to the new max. bending angle value for this special rail. The bending angle value must be set in line with the marking line. Secure the graduated collar with the knurled set collar. If a program contains a higher bending angle in the "Angle" column than is possible for this special rail, the machine switches back automatically once the max. permitted bending angle has been reached and returns to its starting position.

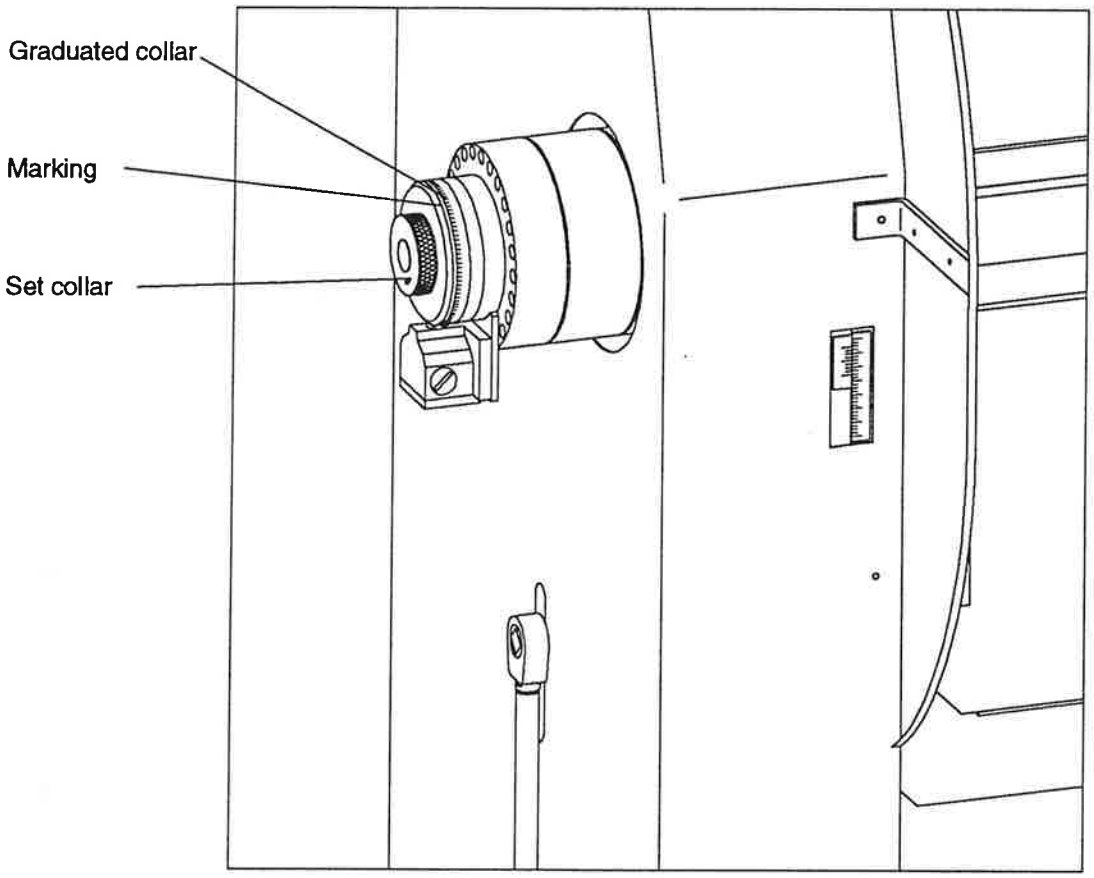

Setting values	Max. bending angle value
Angle rail with 45 degrees	135 degrees
Angle rail with 20 degrees	160 degrees
Radius rail	180 degrees

6.2.4. BENDING CHEEK SETTING

- Refer to Section 6.2.6 for the setting values -

Observe Section 6.1 "OCCUPATIONAL SAFETY DIRECTIVES" under all circumstances.

The motor-driven bending-cheek setting can be triggered in the "PROGRAM" or "JOGGING" operating modes.

In the "PROGRAM" operating mode, the setting range is adjusted automatically in accordance with the entered value when the appropriate program line has been reached.

In the "JOGGING" operating mode, pressing the softkeys (F5) and (F6) or (F7) triggers the setting as long as these keys are pressed.

ATTENTION! **Refer to the separate "CNC-COLOURGRAPHIC-CONTROLLER MULTIBEND 9000 for 74.20-40" instructions.**

ATTENTION! **When working with radius rails, always remember that the lower cheek must also be set as well as the bending cheek.**

If it is necessary to move the **bending cheek** and lower cheek downwards, the bending cheek must be lowered to the common setting **first**, followed by the lower cheek.

If it is necessary to move the **lower cheek** and bending cheek upwards, the lower cheek must be raised to the common setting **first**, followed the bending cheek.

ATTENTION! **Refer to Section 6.2.5 "LOWER CHEEK SETTING".**

The bending cheek can be adjusted from 0 to 3.15 inches downwards.

It is not necessary to undo or tighten screws or clamping devices before or after the adjustment.

The setting value for the bending cheek, entered via the control panel, must always be checked on the scale with vernier. There is a scale with vernier on the right and left-hand sides of the bending-cheek holder (figure).

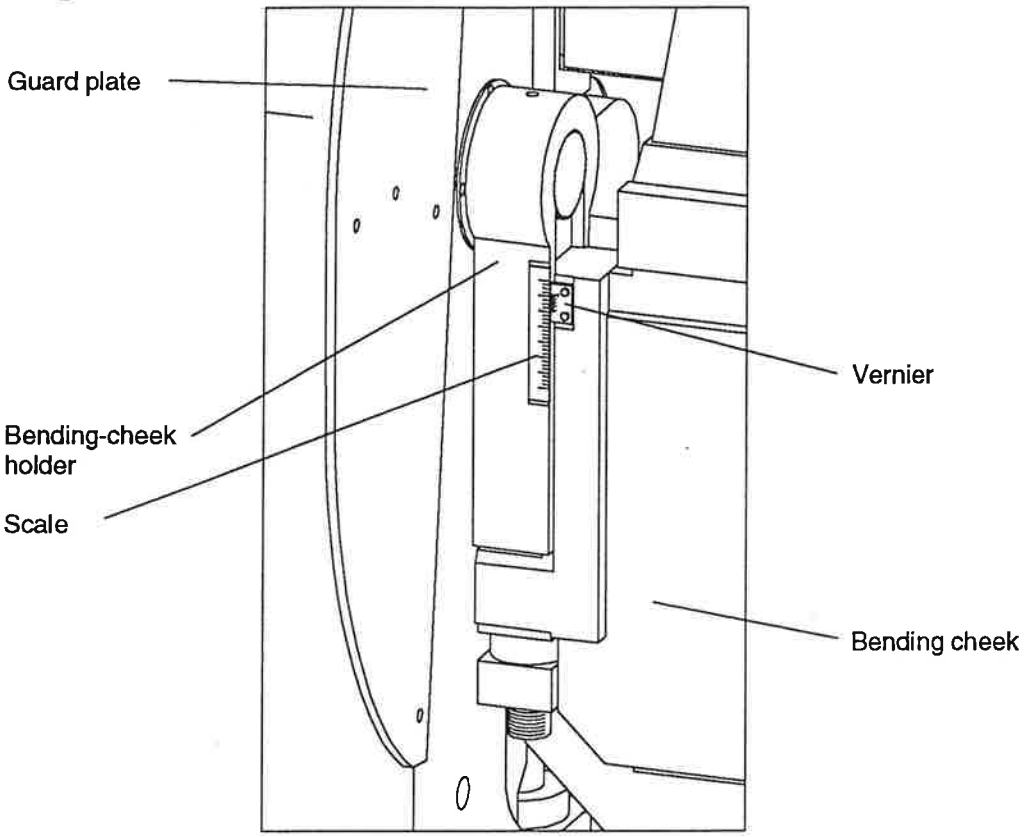

The setting for the bending cheek is 0.02 inches lower than the lower cheek for normal bending work. The two scales on the bending cheek have therefore been positioned in such a way that the bending cheek is 0.02 inches lower than the lower cheek when the bending cheek and the lower cheek are set to the same value.

The bending cheek and lower cheek are therefore set to the same value for normal bending work.

The bending cheek can be set up to 0.08 inches lower than the lower cheek in special cases.

ATTENTION!

The setting for the bending cheek must never be higher than that of the lower cheek.

The drive unit to adjust the bending cheek is integrated in the bending cheek itself. If it is necessary to carry out any repair work on the drive unit, the safety regulations defined under Item 2.5 "OCCUPATIONAL SAFETY DIRECTIVES", Paragraph 17 must be observed.

The machine must always be switched off before starting repair work. For this, the main switch on the switchgear cabinet must be turned off and secured with a padlock. The responsible member of staff must take possession of the padlock key.

6.2.5. LOWER CHEEK SETTING

- Refer to Section 6.2.6 for setting values -

Observe Section 6.1 "OCCUPATIONAL SAFETY DIRECTIVES" under all circumstances under all circumstances.

ATTENTION!

Section 6.2.4 "BENDING CHEEK SETTING" must also be taken into consideration under all circumstances.

ATTENTION!

Refer to the separate "CNC-COLOURGRAPHIC-CONTROLLER MULTIBEND 9000 for RAS 74.20-40" instructions.

The setting procedure takes place automatically. The program logic controls the adjustment procedure for the bending and lower cheeks in the correct collision-free order.

The logical recognition facility reacts to incorrect inputs with non-performance and an error display

"ERROR ! INCORRECT VALUE FOR BC S or LC S".

The bending cheek is usually lower or on the same level as the lower cheek. The lower cheek may be set to max. 0.08 inches above the level of the bending cheek, however, in special cases.

The values may be entered directly and determined by means of a mathematics program.

Factor	Unit	Remarks
Sheet thickness	inches	
Inner radius	inches	
Bending length	inches	
Strength	1 - 8	1 = 14504 lb/in^2 . . . 8 = 116030 lb/in^2

6.2.6. SETTING VALUES FOR THE LOWER CHEEK AND BENDING CHEEK

Refer to Section 6.2.7 "ADJUSTING PROGRAMMABLE LOWER CHEEK AND BENDING CHEEK" for machines with motor-driven lower cheek adjustment (special version).

Observe Section 6.1 "OCCUPATIONAL SAFETY DIRECTIVES" under all circumstances.

ATTENTION!

Observe the following under all circumstances for adjustment work, in order to prevent collisions:

When moving downwards, always bring the bending cheek to the common setting first, followed by the lower cheek.

When moving upwards, always move the lower cheek to the common setting first, followed by the bending cheek.

The lower cheek and bending cheek must always be set with respect to the point of rotation in the correct order before starting bending work on the folding machine.

This depends on the thickness of the sheet to be bent or on the respective radius and sheet thickness when bending with radius rails.

When angle rails are used for bending, the setting dimension for the lower and bending cheeks is

e = 1.25 x sheet thickness

The value must be set and checked on the respective scales.

EXAMPLE:

When bending a metal sheet 0.12 inches thick with the minimum possible bending radius (refer to Item 1 "TECHNICAL DATA"), the setting for the lower cheek and bending cheek is as follows:

e = 1.25 x 0.12 inches = 0.15 inches

The lower cheek and the bending cheek must therefore be set to 0.15 inches

When radius rails are used for bending, the setting for the lower cheek and bending cheek is as follows:

e = radius + sheet thickness.

The value must be set and checked at the relevant scales.

EXAMPLE:

When bending a metal sheet 0.08 inches thick with a radius rail R = 0.59 inches, the setting for the lower cheek and bending cheek is as follows:

e = (0.59 + 0.08) inches = 0.67 inches

The lower cheek and the bending cheek must therefore be set to 0.67 inches

6.2.7. ADJUSTING PROGRAMMABLE LOWER CHEEK AND BENDING CHEEK

- Special version -

Observe Section 6.1 "OCCUPATIONAL SAFETY DIRECTIVES" under all circumstances

Thanks to its logical recognition facility, the machine first moves the bending cheek to the common setting dimension in a downwards direction, followed by the lower cheek.

The lower cheek moves to the setting dimension in an upwards direction first, followed by the bending cheek.

Before the lower cheek moves upwards, the upper cheek opens by the prescribed lower-cheek adjustment for safety reasons.

When moving downwards, the upper cheek opens by its clamping value.

The respective setting depends on the relevant factors.

Sheet thickness inches/inner radius inches/bending length feet/strength 1 - 8.

The setting dimensions described under 6.2.6 "SETTING VALUES FOR THE LOWER CHEEK AND BENDING CHEEK" can be used as reference values for direct input.

6.2.8. IMPRESSION BENDING

Observe Section 6.1 "OCCUPATIONAL SAFETY DIRECTIVES" under all circumstances.

For impression bending, using the upper cheek, with the bending cheek swiveled out, enter "J" as information in the "HELP FUNCTIONS" cursor field.

The "impression bending" help function reduces repetitive working processes to a single swing-out movement of the bending cheek and the "close upper cheek" function. The bending cheek moves to its predetermined position of its own accord before the upper cheek closes and remains in the approached bending position. The bending angle is adjusted automatically or changed to a new angle.

The "CLOSE UPPER CHEEK" foot switch is used to start and resume the working sequence.

Taking this a step further, it is possible to combine radii from various bending segments logically. A radius rail, which need not necessarily correspond to the generated radius, can be used to obtain optimum results. This makes the segments inconspicuous.

The bending cheek returns automatically if the "J" help function is not selected.

Impression bending is only possible within the angle range of the 0 - 25 and for sheet thicknesses of up to 0.05 inches (18 ga).

6.2.9. REPLACING THE RAIL

Observe Section 6.1 "OCCUPATIONAL SAFETY DIRECTIVES" under all circumstances.

Only authorized people are allowed to change the blades. Prior to the blade changing, these people must read this paragraph thoroughly and must have understood this.

UPPER-CHEEK RAIL

The upper cheek must be opened and supported as described under Section 2.5 "OCCUPATIONAL SAFETY DIRECTIVES", Paragraph 18.

The machine must always be switched off before replacing any of the upper-cheek rails. For this, the main switch on the switchgear cabinet must be turned off and secured with a padlock. The responsible member of staff must take possession of the padlock key.

The upper-cheek rail holder has a bayonet fixing. The rail must be pressed to the right along its length until it reaches the bayonet stop.

There are threaded holes in the front end of the rails.

It is of advantage if a screw is fitted into this hole on the end of the rail in such a way that it projects approx. 2 inches.

CAUTION: The internal threads provided are for metric screws. The inserted depth must be at least 2 x thread diameter.

You can now use a hardwood lever, braced against the upper-cheek guide, to press out the machine to the right-hand side.

The upper-cheek rails may be very heavy - according to version - . The corresponding weights are marked in each blade at the right hand side. Prior the each blade changing, the authorized people must be consider these weight indication. It is therefore absolutely necessary to ensure that enough people are available to change the rails. Each person should not lift more than approx. 66 lbs (30 kg).

At divided goat foot blades with corresponding holding blade, prior to the blade changing the part pieces must be taken off the holding blade in order to reduce the blade weight to a minimum. The weight of the holding blade is marked at the right hand side of the blade and this only corresponds to the holding blade without build-in part pieces.

When removing the rail, it is advisable to pull it out on the right-hand side first until the rail is basically only held on the left-hand side by its retainer.

The new rail is installed in reverse order, i.e. the rail is first inserted into its retainer on the left-hand side, then swung into place on the right-hand side, finally being brought into the working position by sliding to the left as far as the stop.

ATTENTION!

Every time a rail is replaced on the upper cheek, the safety limiter for the bending angle must be readjusted in accordance with Section 6.2.3 "ADJUSTING THE SAFETY DEVICE FOR MAX. BENDING ANGLE". Apart from this, the hardwood blocks placed under the upper cheek must be removed again.

VIEW OF THE MACHINE FROM THE REAR LEFT-HAND SIDE

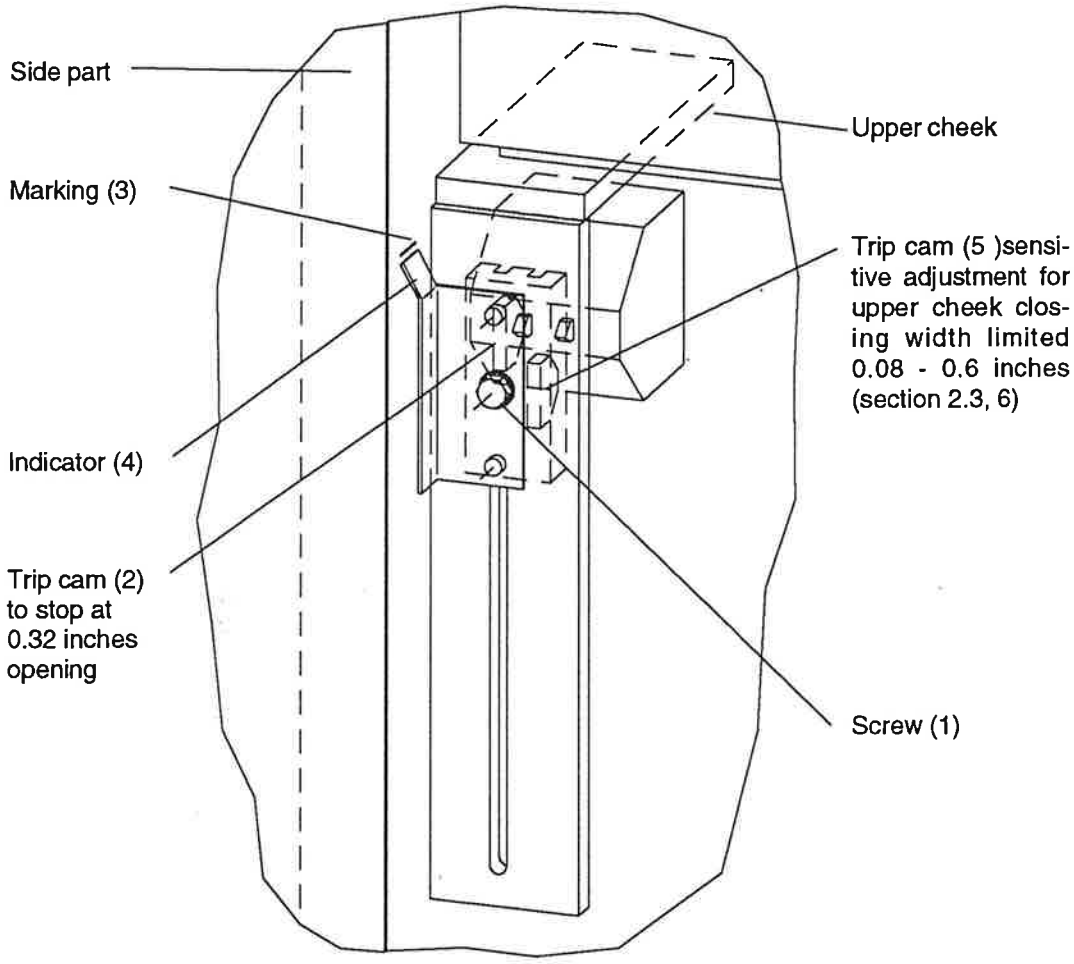

IMPORTANT:

Every time a rail is replaced in the upper cheek, the trip cam for the fail-safe control system governing closure of the upper cheek, i.e. stopping the closing movement of the upper cheek automatically when a safety opening of 0.32 inches has been reached - depending on the rail height - must be readjusted under all circumstances. For this, every time an upper-cheek rail is replaced, close the upper cheek carefully with the foot switch. Once the upper cheek is closed, undo the screw (1) and set the indicator (4) in line with the marking (3) on the side part of the machine, then tighten the screw (1) again securely. The trip cam (2) is the determining factor for the safety opening width of 0.32inches.

ATTENTION!

Once readjusted, check that the trip cam operates correctly for the safety opening width of 0.32 inches. The trip cam must respond in such a way that the closing movement of the upper cheek stops at 0.32 inches. The setting must be corrected if necessary.

Every time a rail is replaced, always read these information notices on the right-hand side of the upper cheek (in front of the machine) and on the left-hand side of the upper cheek (viewed from the rear).

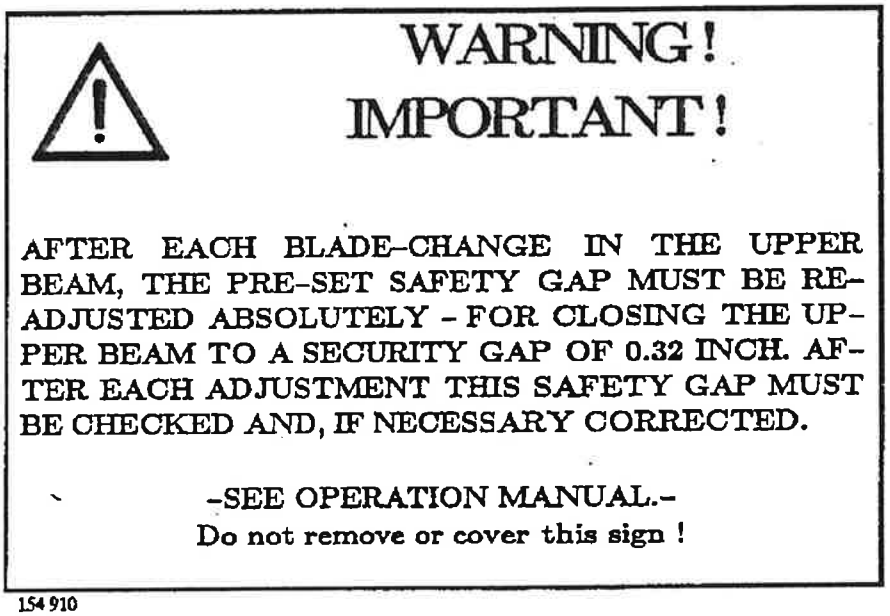

154 910

ATTENTION!

If special rails are used, the max. permitted sheet thickness and max. opening width for the upper cheek may be reduced (also refer to Chapter 1 "TECHNICAL DATA").

BENDING-CHEEK RAIL

When bending profiles which require a special rail instead of the standard bending rail in the bending cheek, the replacement procedure is as follows: The bending cheek must be in its starting position.

The machine must always be switched off before replacing the bending-cheek rail. For this, the main switch on the switchgear cabinet must be turned off and secured with a padlock. The responsible member of staff must take possession of the padlock key.

The bending-cheek rails may be very heavy - according to version and length - .The corresponding weights are marked in each blade at the right hand side. Prior the each blade changing, the authorized people must be consider these weight indication. It is therefore absolutely necessary that enough people are available to replace the rail. Each person should not lift more than approx. 66 lbs - 30 kg.

Once the machine has been disconnected from the electric system, undo all screws holding the bending rail.

Using the extractor hook (included in the supplied accessories) in the auxiliary hole provided on the right-hand side of the rail, pull the rail upwards out of the retaining groove. Place the replacement rail into the retaining groove on the bending cheek from above. Care must be taken to ensure that the rail makes good contact along its entire length. Then tighten all screws again.

ATTENTION!

When fitting narrow bending rails, always be sure to use the shorter fastening screws which belong to the rail.

ATTENTION!

When using narrower bending rails than the 1.18" standard bending rail, the max. permitted sheet thickness may be reduced. Consult the manufacturer for permitted values (also refer to Chapter 1 "TECHNICAL DATA").

6.2.10. CORRECTING THE STOP DIMENSIONS

The machine must always be switched off before correcting the dimensions. For this, the main switch on the switchgear cabinet must be turned off and secured with a padlock. The responsible member of staff must take possession of the padlock key.

If, for example, it is necessary to adjust the stop dimension after the rear stop has been fitted, or at a later date, the adjusting screw on the rear side of the stop can be used to make such corrections (refer to the following figure).

A graduation mark on the scale disk corresponds to 0.004 inches, whereby the stop dimension becomes greater when turned to the right and smaller when turned to the left.

Once the dimensions have been corrected, reconnect the machine to the electric system and recalibrate the stop by pressing the "Calibrate" pushbutton.

6.2.11. PARALLEL POSITION OF THE STOP

The machine must always be switched off before parallel positioning. For this, the main switch on the switchgear cabinet must be turned off and secured with a padlock. The responsible member of staff must take possession of the padlock key.

The stop may - if necessary - be positioned parallel from the rear side of the stop.

For this, undo the hexagon-head screw slightly with a 0.75 inch wrench and slide the guide to the appropriate side.

The guide is attached to a pivot point at the front.

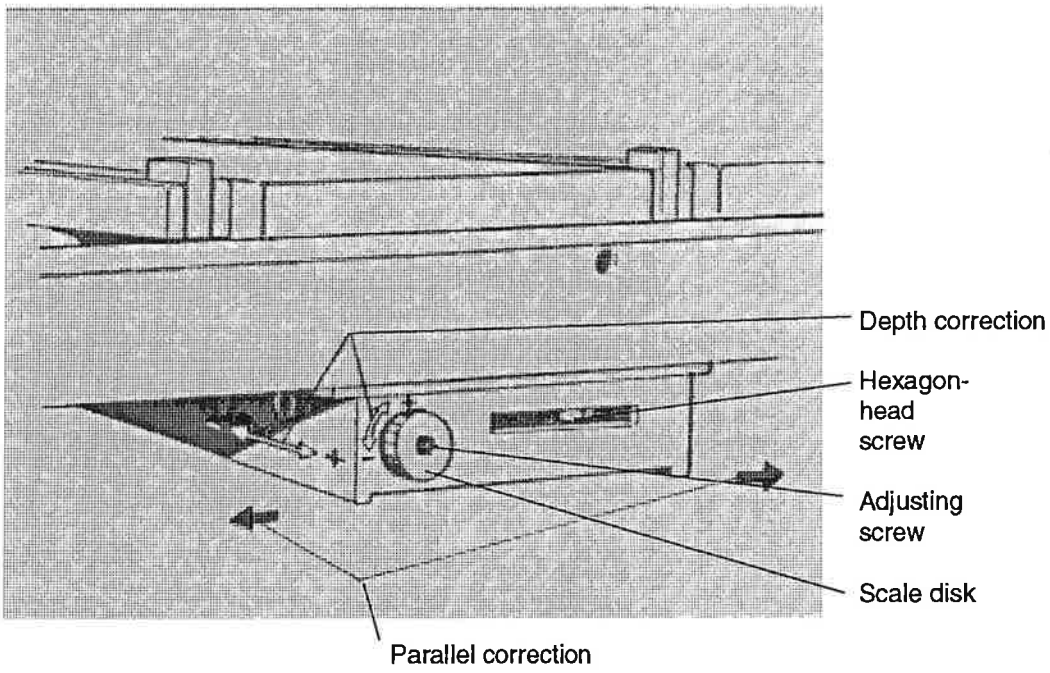

Keep your hands away from the plate stop when in motion.
Observe warning notices on the plate stop.

7. AUXILIARY EQUIPMENT

7.1. TWO-PERSON OPERATION USING FOOT SWITCH

Observe Section 6.1 "OCCUPATTIIONAL DIRECTIVES" under all circumstances.

This version of the machine is equipped with two foot switches.

According to the accident prevention regulations, the same degree of safety must be guaranteed for all persons involved in two-person operation. It is therefore prohibited to work with one foot switch if the machine is operated by two people.

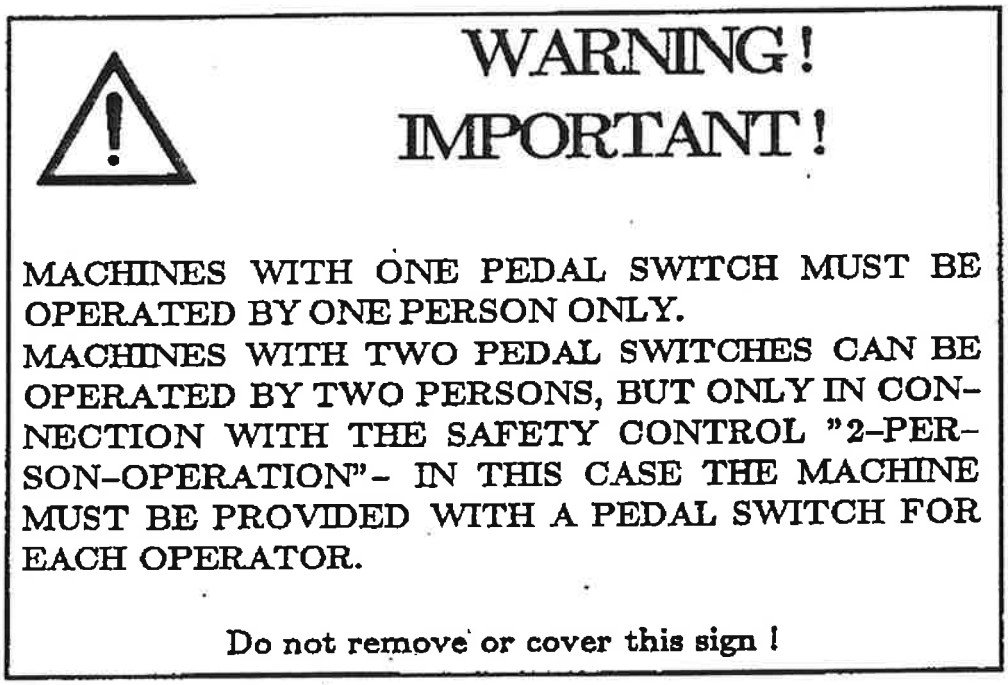

154 911

The key lock switch with control lamp on the rear panel of the switchgear cabinet (face) can be used to connect a second foot switch for two-person operation (refer to the following figure and the enclosed drawing "Switchgear cabinet RAS 74.20-40").

The key for this key lock switch can be withdrawn in every position for safety reasons to ensure that unauthorized members of staff cannot alter the setting. The foreman or supervisor, responsible for the machine operators, must always take possession of the key.

Activate two-person control by turning and pulling out the key lock switch.

Two-person control mode has been activated when the associated pilot lamp lights up.

To close the upper check when two-person control is active, both operators must press the left-hand "Close upper cheek" pedal within 3 seconds for safety reasons.

The upper cheek comes to an immediate standstill if one of the two pedals is released.

Open the upper cheek by pressing one of the two foot pedals "Open upper cheek".

Both of the right-hand "Automatic start" pedals must be pressed simultaneously for a short period to start the automatic bending sequence. The movement of the bending cheek can be interrupted by pressing one of the central "Emergency stop" pedals.

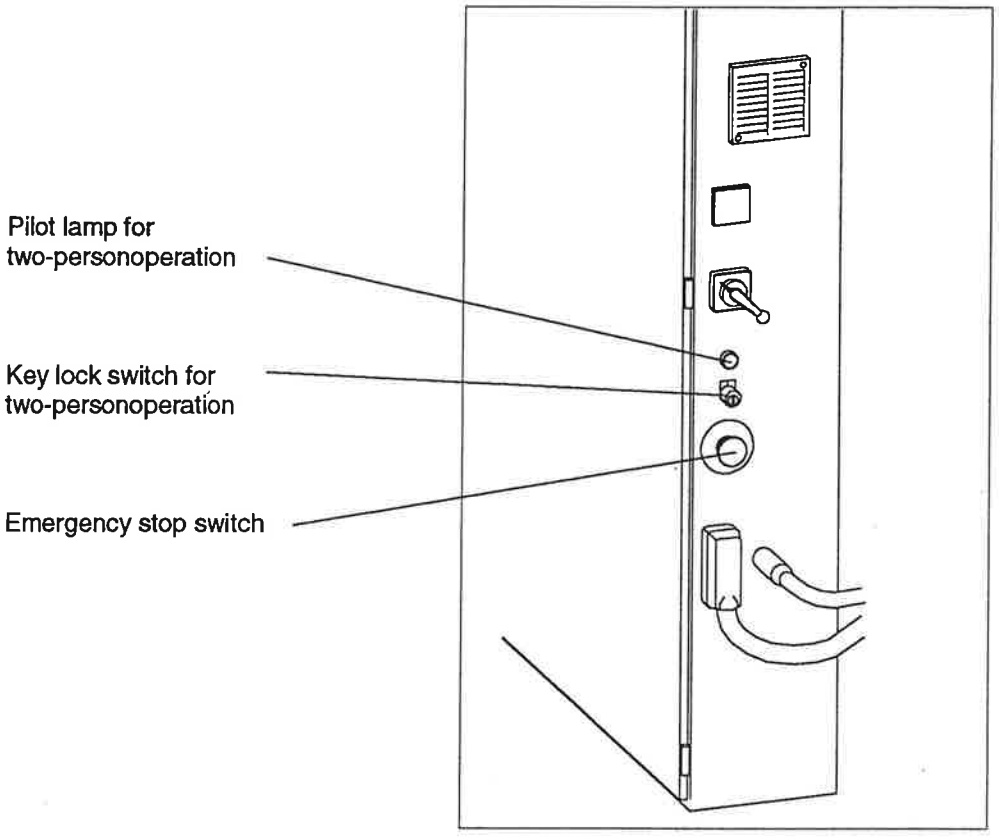
Pilot lamp for
two-personoperation
Key lock switch for
two-personoperation
Emergency stop switch

7.2. AUTOMATIC TOOL SYSTEM WITH AUTOMATIC CLAMPING

See also the enclosed "Sales documentation, automatic tool system for RAS 74.20-40" (Pages 1 - 13)

7.2.1. GENERAL

Only tools in the enclosed sales documentation may be used if the machine is fitted with a holding rail for the automatic tool system. Rails from the standard tool system cannot be used, since the holding rail is not interchangeable.

It is essential to ensure that the permissible sheet thicknesses and strengths of the sheets being bent are not exceeded, taking into consideration that the maximum permissible values can be limited both by the tools themselves and by the machine. It is therefore necessary to take into account the maximum permissible value for the tools (shown in the enclosed sales documentation) and the maximum permissible value from the Technical Data of the machine (see Section 1.1), whereby the respective lower value must not be exceeded.

7.2.2. FITTING AND REMOVING THE TOOLS

Also see Section 2.3 "Work safety instructions".

Only persons authorized to change tools may fit and remove them. They must have first read and understood this section of the operating instructions.

Refer to the enclosed operating instructions "CNC-COLOURGRAPHIC-CONTROLLER MULTI-BEND 9000 for RAS 74.20-40" for detailed instructions on operating the machine.

Open the upper cheek and secure it against lowering by using two hardwood supports in the right and left side section, approximately 80 mm x 80 mm x 300 mm long.

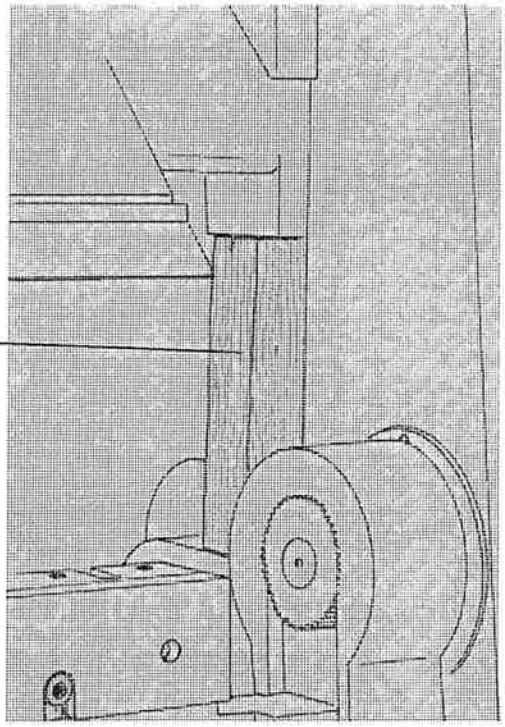

Tools may only be fitted and removed when the machine is switched off.

This necessitates not only switching off the machine control, but also the main switch on the control cabinet. The main switch must be secured with a padlock whilst tools are being fitted and removed. The person authorized to perform this task must keep the key to the padlock on his person.

The tool clamp is released when the machine is switched off.

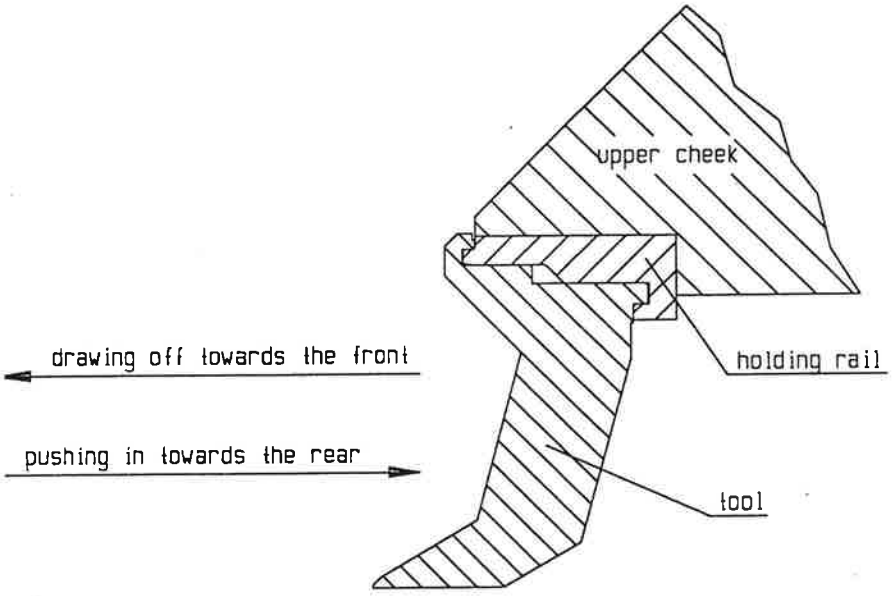

The fitted tools can be removed towards the front.

Caution:
Hold tools securely and do not drop them.

Other tools can be pushed into the holding rail towards the rear.

At least two tools (two grid pieces or two corner pieces) must be fitted in the upper cheek, whereby it is necessary to guarantee that at least one tool is in the left half and one is in the right half.

ATTENTION!

The tools must all be firmly pushed in towards the rear, so that they all securely rest against their support surfaces. When you have ensured that all tools are securely fitted, you can switch on the main switch and the control at the key-operated switch. The tools are simultaneously clamped. The upper cheek must then be opened slightly. To do this, press the left foot pedal firmly downwards as quickly as possible beyond the pressure point into the "Upper cheek open" position so that the upper cheek opens slightly further (see Section 5.2). The hardwood supports inserted to secure the upper cheek must then be removed again. The machine is ready for operation again.

7.2.3. SCALE AT UPPER BEAM

For your guidance where the single tool groups should be assembled along the upper beam, together with the machine will be delivered a self-adhesive scale which must be fixed to the machine. This scale is consisting of 3 parts (4 parts at the RAS 74.40) which must be composed. It is executed for fixing alternatively to the left or right hand side starting with "Zero". Please take the starting of the holding blade for zero position. The overstanding rest part must be cut-off.

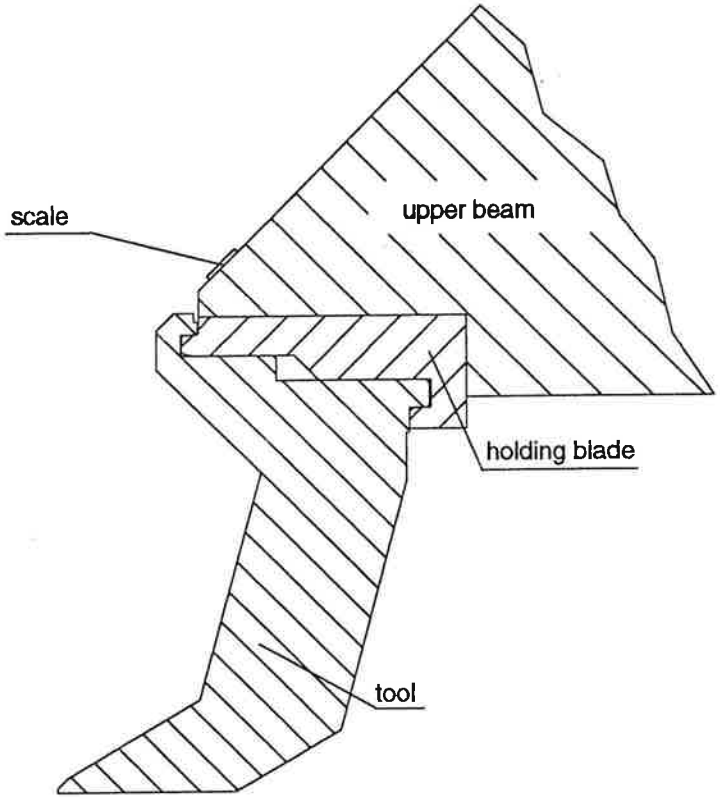

RAS Reinhardt Maschinenbau GmbH
Richard-Wagner-Str. 4-10

D-71065 Sindelfingen

SALES DOCUMENTS

automatic tool-system
for RAS 74.20-40

RAS tool system for the hydraulic leaf-type folding machines RAS 74.20-40

- Suitable for the automatic tool clamping
- Retrofittable for all versions of the model RAS 74.20-40

Features of the new tool system:

☞ **High-quality quenched and tempered and surface-hardened (plasma-nitrided)**

Advantages:
* High bending capacity:
  4 mm sheet thickness with 100 mm goat's foot height
  3 mm sheet thickness with 150 mm goat's foot height
  2 mm sheet thickness with 200 mm goat's foot height
  5 mm sheet thickness with sharp blades (at 400 N/mm^2 tensile strength)
  Exceptions: By limited capacity of the machine
* Tool strength about 1000 N/mm^2
* Low wear
* Dimensionally stable
* Large clearances

☞ **Precicion ground**

Advantages:
* Tool sets can also be added to and exchanged subsequently
* Precice bending results

☞ **Laser labeling of the tools with important data: height, length, clearances, RAS logo and order number**

Advantages:
* No mix-ups occur during installation
* Detailed description for subsequent orders
* Rapid identification of the correct tools

☞ **All tools divided**

Advantages:
* Tool set consisting of e. g. basic segments, adapter pieces, corner pieces
* Short set-up time
* Changing by only 1 person within a very short time
* Low weight (average about 7 kg)
* Any desired combination is possible

☞ **All tools fit the automatic tool clamping**

Advantages:
* No holding rails need to be changed
* Short set-up time
* It is not necessary to remove segments from the previous order if they are lower (less complicated retooling, reduced item costs)

☞ **Removal and fitting of tools without further devices (hexagon socket screw key)**

Advantages:
* Fast set-up
* Work simplified

☞ **Goat's foot tools divided up into "Front-free" and "Rear-free" tools**

Advantages:
* Thorough utilization of the clearances in front of or behind the tool
* Front-free up to 60 mm deep
* Rear-free from 50 mm

☞ **Goat's foot and sharp tools with 30° point**

Advantages:
* Greater prebending angles for hems
* Deep C profiles can be bent
* Quenching and tempering and hardness guarantee stability

☞ **Sharp tools in flat design**

Advantages:
* Large clearances enable superior bending geometry

☞ **Any tool length can be achieved in 5 mm steps**

Advantages:
* Fast tool change by suitable length partition of basic segments, adapter and corner pieces
* The length combinations are automatically determined with the "MULTIBEND 8001" CNC control system

☞ **Different tool types can be combined in one setting**

Advantages:
* Front-free and rear-free tools can be used together
* Reduction of tool costs
* Quick set-up, since only tools for the new order have to be used, the remaining sections can remain in the machine

☞ **Tool lengths are adapted to the part lengths to be bent rather than to the machine length**

Advantages:
* Reduced tool costs
* Retrofitting possible at any time
* Lengths can be combined from various tools with the same height

☞ **Holder with optimal lever ratios**

Advantages:
* Safe and firm holding of the tools in the upper beam
* Thick sheets can also be bent with goat's foot tools
* Bending forces safely dissipated

☞ **Engaging the tools during setting-up**

Advantages:
* Safe prefixing at the clamping position
* Unclamped tools do not fall out

☞ **Tools can be used on machines of different lengths**

Advantages:
* Total tool costs reduced

☞ **Standard tools**

Advantages:
* V = Front-free, H = Rear-free
* Goat's foot tools 100V, 100H, 150V, 150H, 200V, 200H
* Sharp blades L = 400, L = 40, L = 60
* Retrofittable at any time
* Lower purchasing costs
* Tools can be adapted to suit requirements

☞ **Special tools on request**

To match: **Automatic tool clamping**

Advantages:

* Tools held securely when switching-on the power
* No assembly tools necessary during retooling
* Tool seat: High-quality quenched and tempered, surface hardened (plasma-nitrided)
* Tools held securely
* Lower purchasing costs
* Additionally with "MULTIBEND 8001": Control system informs the operator, which part pieces are necessary for combining the required tool length
* Retrofittable for all versions
* Tools can be adapted to suit requirements (the longest part determines the number of necessary tools rather than the machine length)

standard
tool-system

standard
upper beam
RAS 74.30

automatic
tool-system

automatic
clamping !

l = 3000 mm

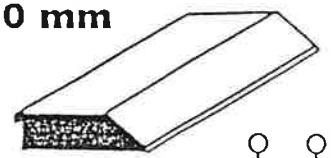

l = 3000 mm

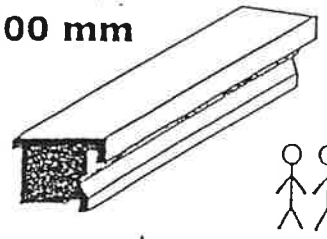

sharp tools

l = 40 - 400 mm

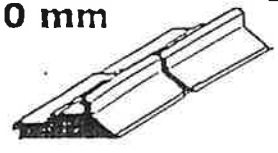

= 3000 mm

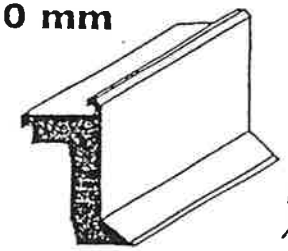

l = 50 - 800 mm

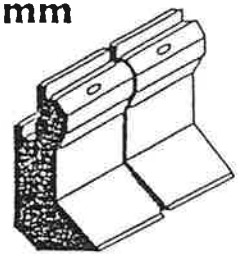

l = 30 - 195 mm

goat's foot tools

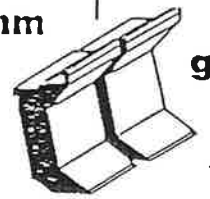

l = 30 - 195 mm

radius tools

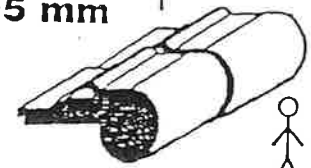

3000 mm

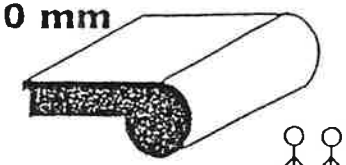

RA

Samples of tool combinations

1.) Tool type: "Front-free"
Part piece: Closed box
Tool requirement of the sample: Adapter set, 4 basic segments
Tool length: Adapted to the longitudinal side
First the front edge sides, then the longitudinal sides are folded.

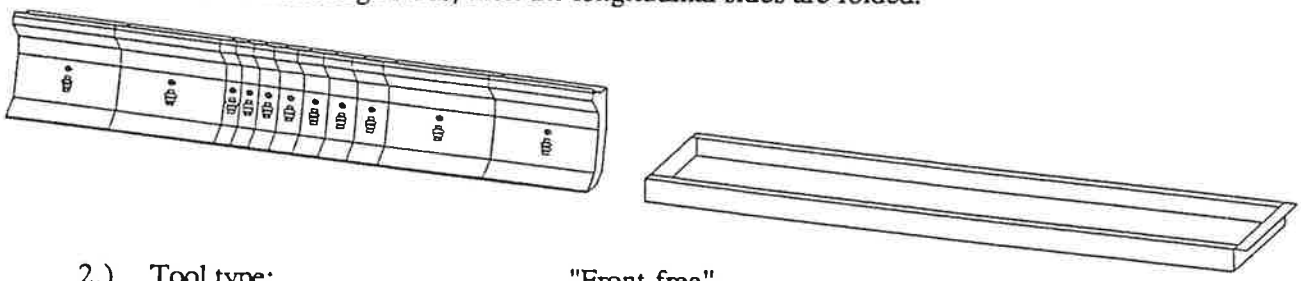

2.) Tool type: "Front-free"
Part piece: Closed box with inward legs at the front edge sides
Tool requirement of the sample: Adapter set, 3 basic segments, corner pieces left and right hand
Tool length: Adapted to the longitudinal side
First the front edge sides, then the longitudinal sides are folded.

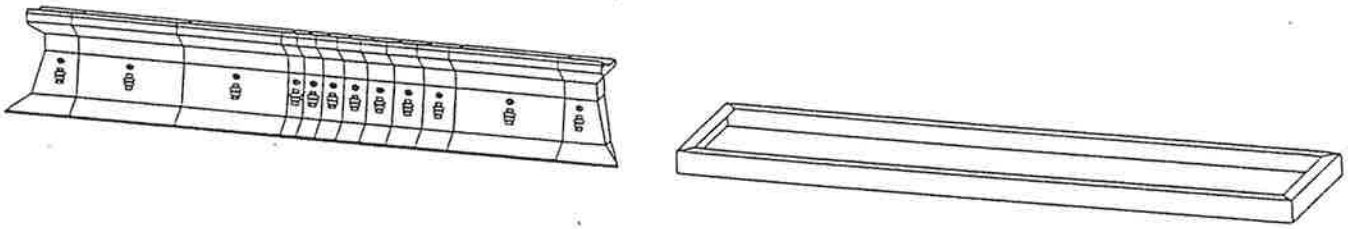

3.) Tool type: "Front-free"
Part piece: Open box
Tool requirement of the sample: 5 basic segments
Tool length: Not to be adapted to the longitudinal side
First the front edge side, then the longitudinal sides are folded.

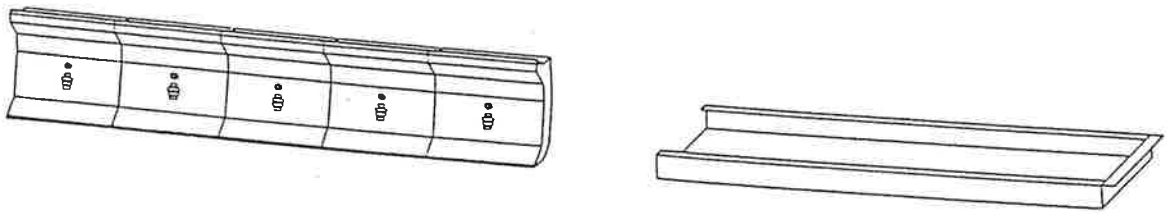

4.) Tool type: "Rear-free"
Part piece: Open box
Tool requirement of the sample: 3 basic segments
Tool length: Not to be adapted to the longitudinal side
First the front edge side, then the longitudinal sides are folded.

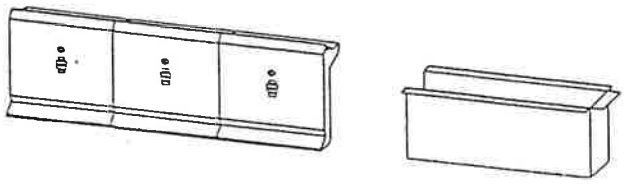

5.) Tool type: "Rear-free"
Part piece: Closed box
Tool requirement of the sample: Adapter set, 3 basic segments
Tool length: Adapted to the longitudinal side
First the front edge sides, thee the longitudinal sides are folded.

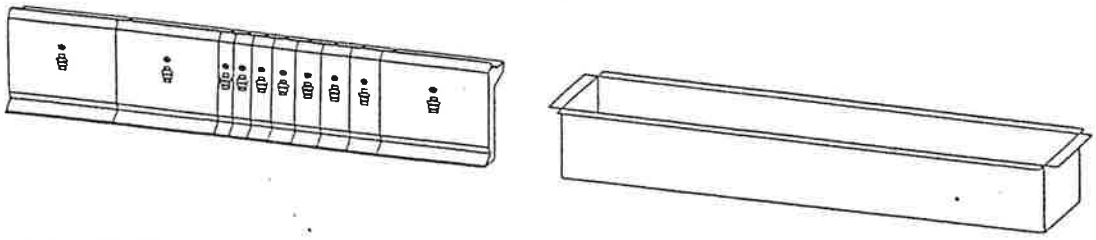

6.) Tool type: "Front-free" and "rear-free" in 2 stations
Part piece: Closed box
Tool requirement of the sample: Adapter set "front-free", Adapter set and 3 basic segments "rear-free"
Tool length: Adapted to the front edge side
First the longitudinal sides, then the front edge sides are folded.

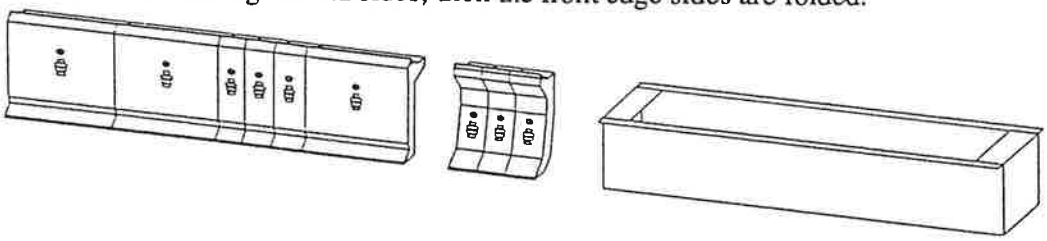

7.) Tool type: "Front-free" and "rear-free" in combination
Part piece: Closed box
Tool requirement of the sample: Adapter set "front-free", Adapter set and 3 basic segments "rear-free"
Tool length: Adapted to the longitudinal side
First the front edge sides are folded with the tools "front-free", then the longitudinal sides with the combined tool length. The free space of the "rear-free" tools is sufficient for the short C-folding at the longitudinal side.

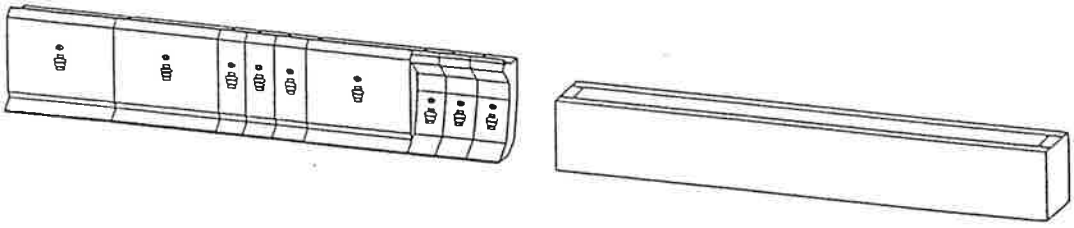

How to select the required tool part pieces

1. Determine **tool geometry** out of the range of parts:
   - V-tools (front free) for profiles closing at the front
   - H-tools (rear free) for lean profiles
   - Corner pieces for profiles closing at the front, 3sided or 4sided

2. Determine **number of tool part pieces:**
   - State the longest folding part of the drawings, which should be bent with the determined tool geometry
   - a) **Sharp tools:**
     Largest dimension : 400 mm = Number of part pieces
   - b) **Goat's foot tools:**
     - for each tool geometry one adapter set is necessary
     - the number of basic segments for each tool geometry is calculated as follows:

Without corner pieces	With corner pieces (V)	With corner pieces (H)
Largest bending length - 315 mm (adapter set)	Largest bending length - 555 mm (adapter set, corner pieces)	Largest bending length - 469 mm (adapter set, corner pieces)
: 195 mm (basic segment)	: 195 mm (basic segment)	: 195 mm (basic segment)
= Number of basic segments	= Number of basic segments	= Number of basic segments

Example: Largest bending length 2670 mm

Without corner pieces	With corner pieces (V)	With corner pieces (H)
Largest bending length - 315 mm (adapter set)	Largest bending length - 555 mm (adapter set, corner pieces)	Largest bending length - 469 mm (adapter set, corner pieces)
2355 mm : 195 mm (basic segment)	2115 mm : 195 mm (basic segment)	2201 mm : 195 mm (basic segment)
= 13 basic segments	**= 11 basic segments**	**= 12 basic segments**

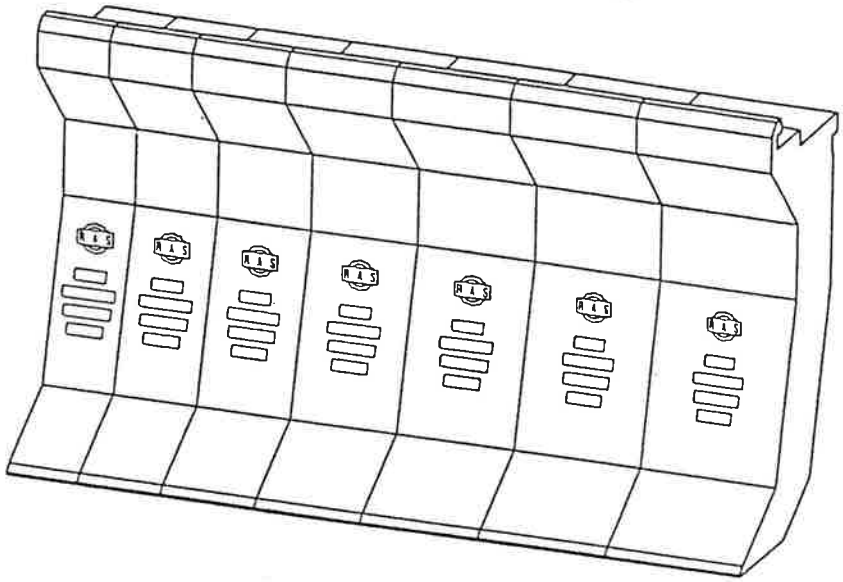

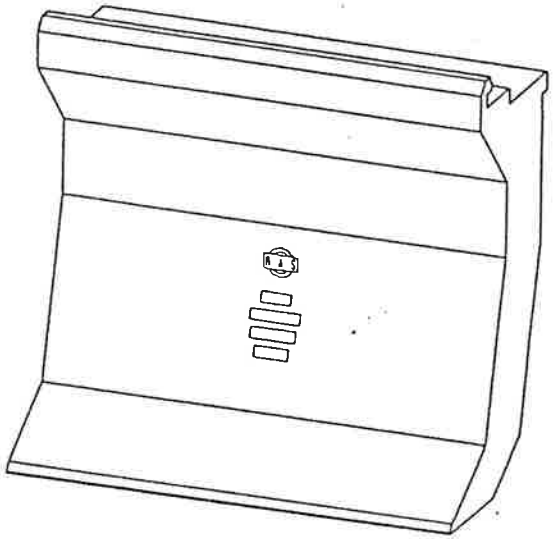

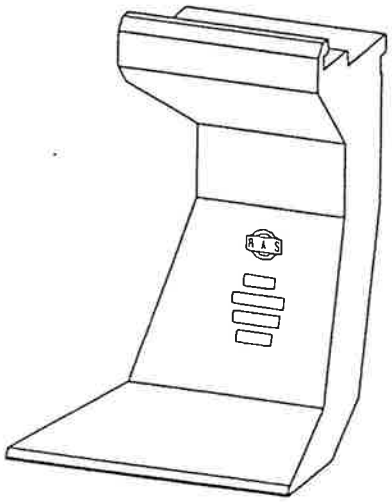

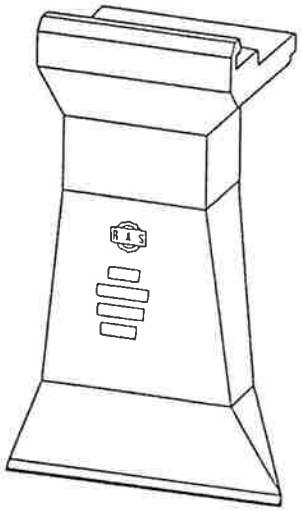

"Front-free"-tools

Adapter set consisting of 7 part pieces (l = 30, 35, 40, 45, 50, 55, 60 mm)
basic segment l = 195 mm
Corner piece, left hand l = 120 mm
Corner piece, right hand l = 120 mm

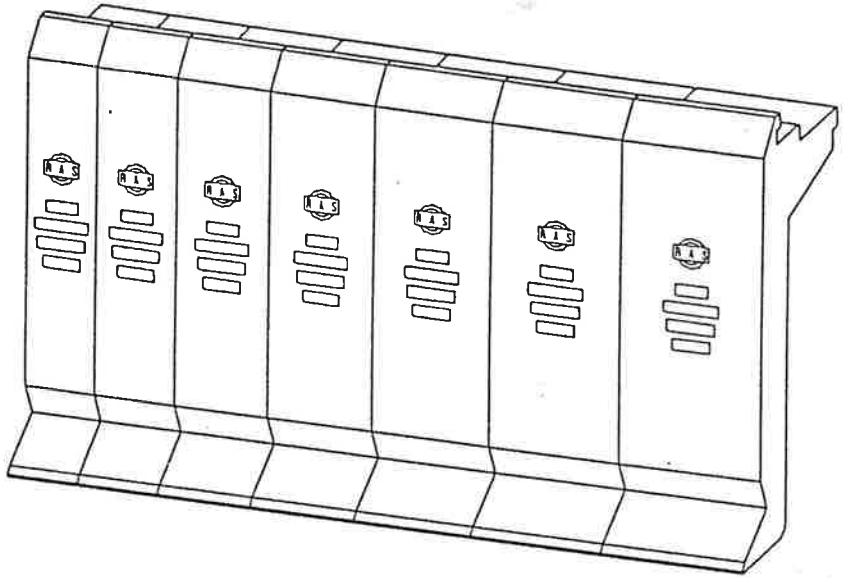

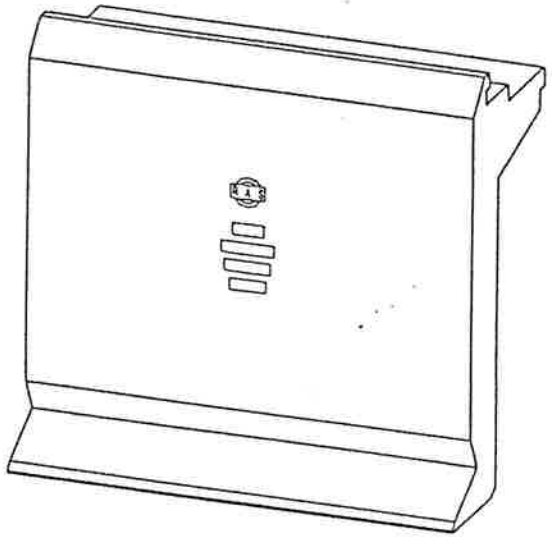

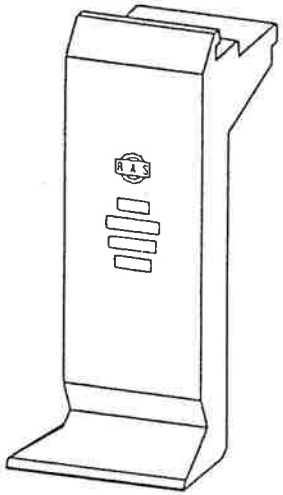

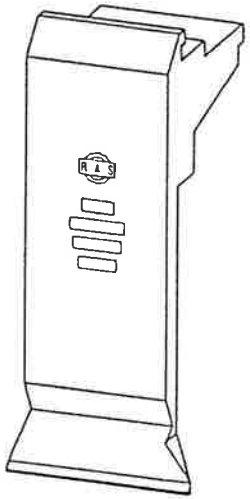

"Rear-free"-tools

Adapter set consisting of 7 part pieces (l = 30, 35, 40, 45, 50, 55, 60 mm)
Basic segment l = 195 mm
Corner piece, left hand l = 77 mm
Corner piece, right hand l = 77 mm

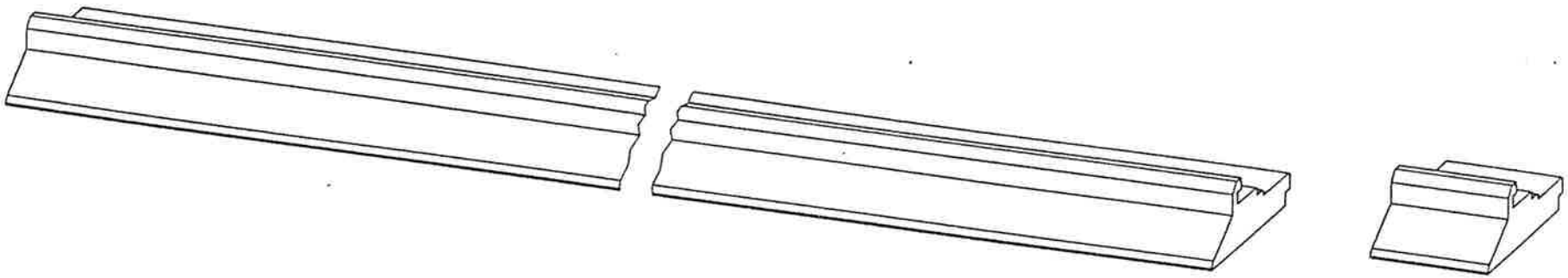

Sharp tools

basic segment l = 400 mm

Adapter piece l = 60 mm

Adapter piece l = 40 mm

crane suspension

machine without back stop

RAS 74.20	9700 lbs.	(4400 kg)
RAS 74.25	10600 lbs.	(4800 kg)
RAS 74.30	11700 lbs.	(5300 kg)
RAS 74.40	13900 lbs.	(6300 kg)

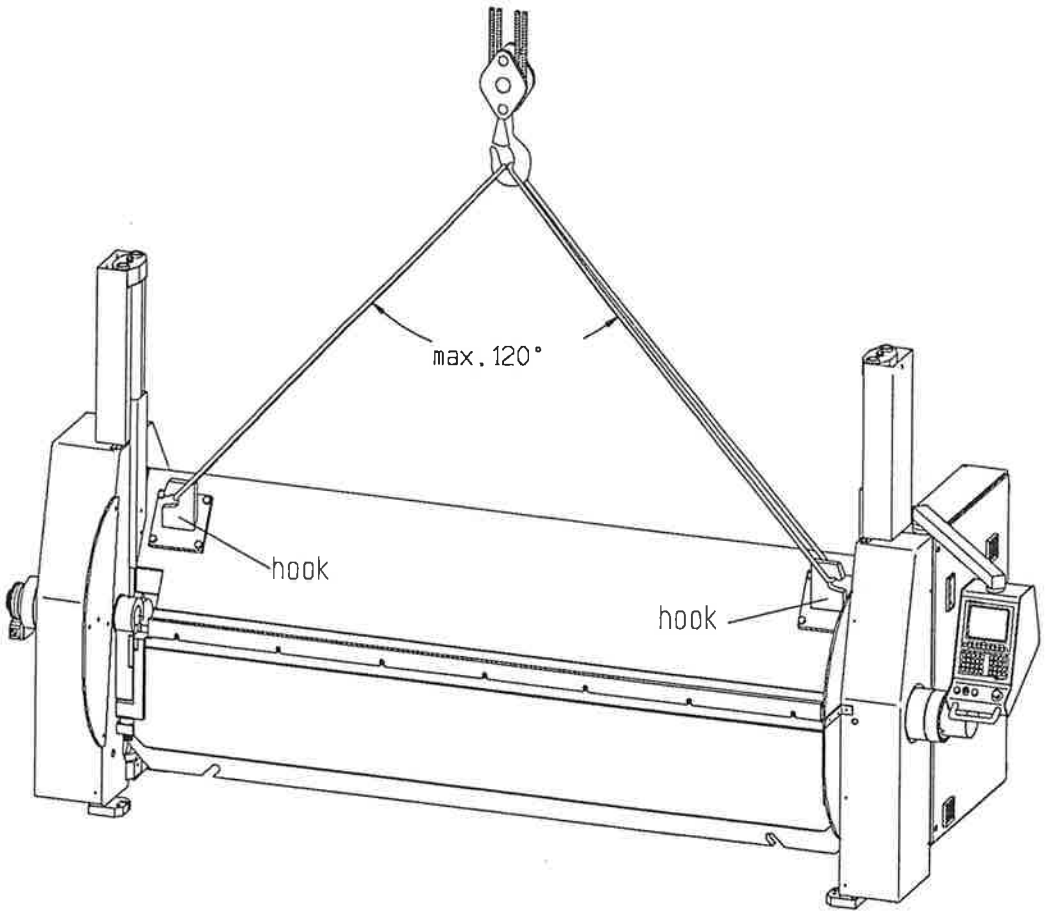

Attention!

Remove unconditionally hooks prior to initial operation!

(drive in sealing plug into thread - keep hooks)

RAS 74.20-25-30-40
"MULTIBEND 9000"

05.03.93 Fischer

crane suspension
machine with back stop

RAS 74.20	10270 lbs. (4660 kg)
RAS 74.25	11195 lbs. (5070 kg)
RAS 74.30	12340 lbs. (5590 kg)
RAS 74.40 back stop width 118.11"	14540 lbs. (6590 kg)
* RAS 74.40 back stop width 157.48"	15040 lbs. (6820 kg)

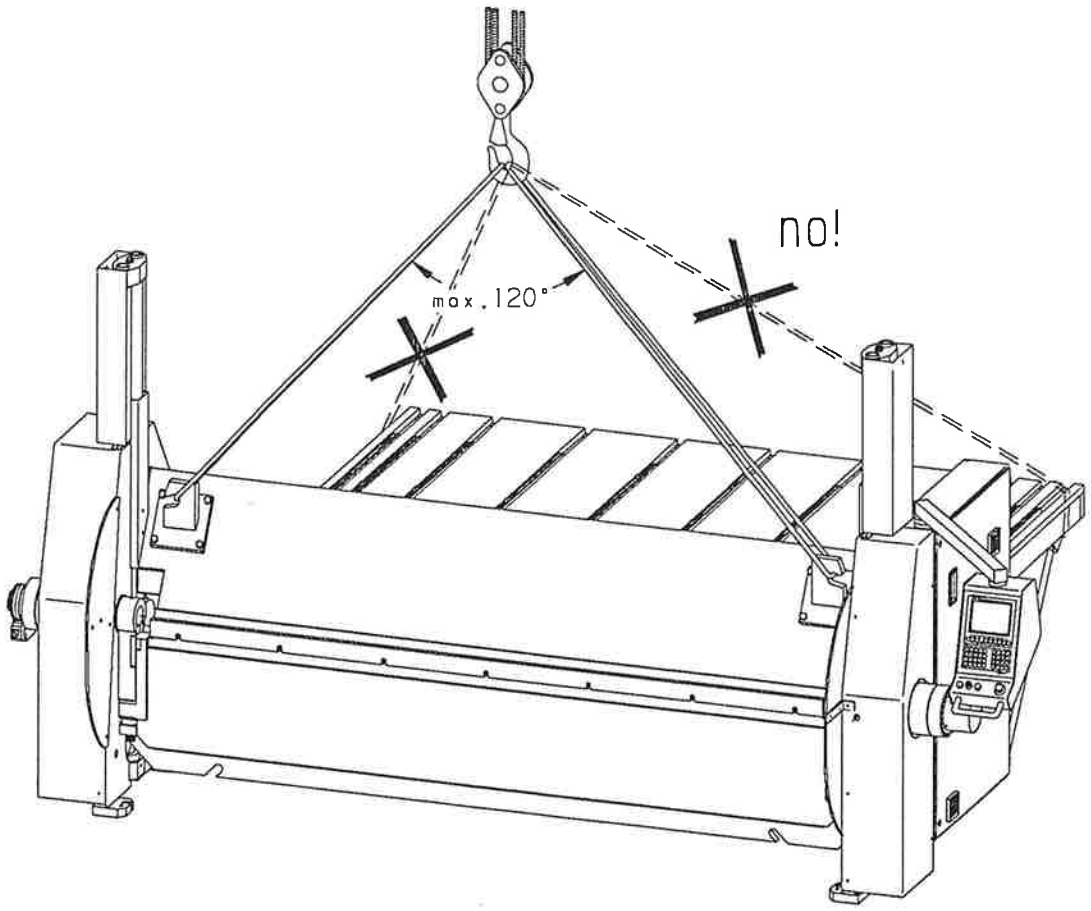

RAS 74.20-25-30-40
"MULTIBEND 9000"

crane suspension back stop

RAS 74.20-25-30-40
"MULTIBEND 9000"

RAS 74.20	570 lbs.	(260 kg)
RAS 74.25	595 lbs.	(270 kg)
RAS 74.30	640 lbs.	(290 kg)
RAS 74.40 back stop width 118.11"	640 lbs.	(290 kg)
* RAS 74.40 back stop width 157.48"	2x570 lbs.	(2x260 kg)

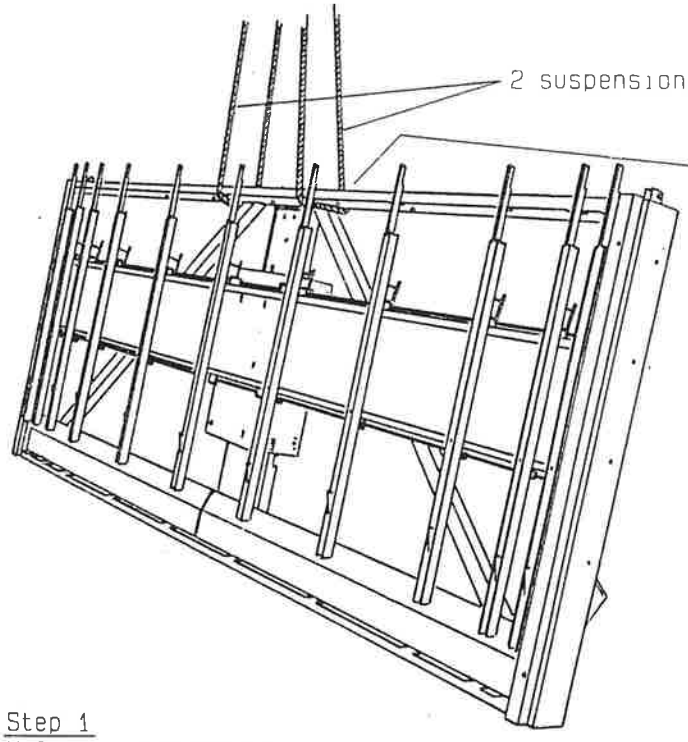

Step 1
Unload and suspend

Step 2
Spot to wooden beam

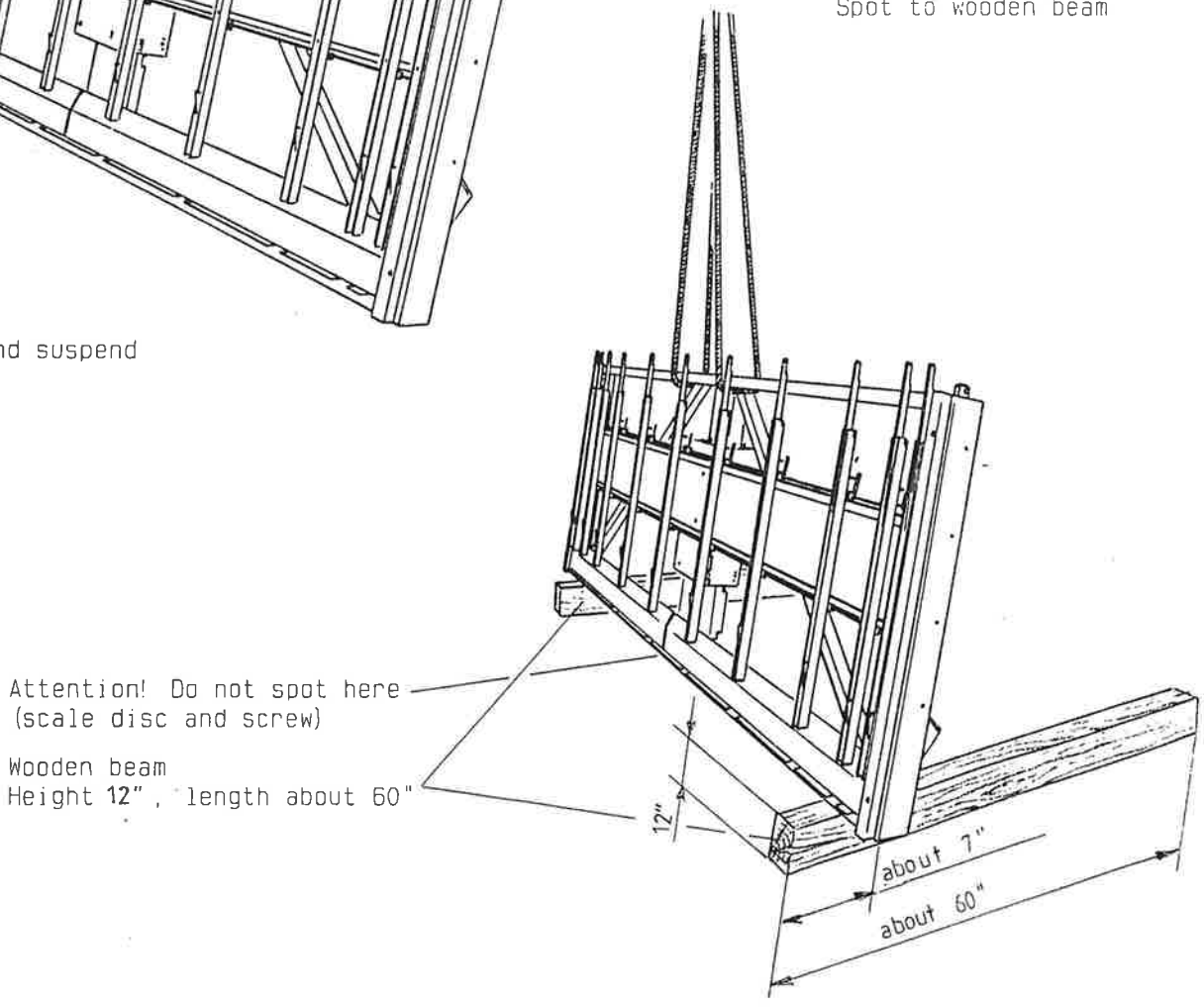

crane suspension back stop

RAS 74.20-25-30-40
"MULTIBEND 9000"

Step 3
Bring back stop into horizontal position

Attention!
Bring back stop carefully from vertical into horizontal position.

Do not damage motor and electric terminal-box.

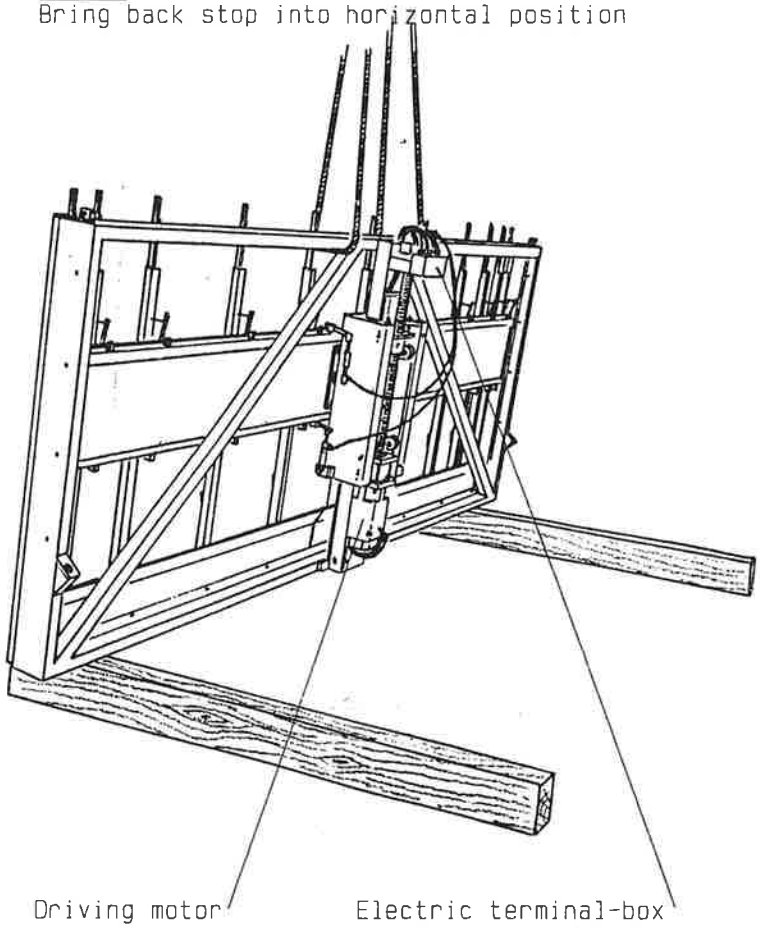

Back stop
Deposit position

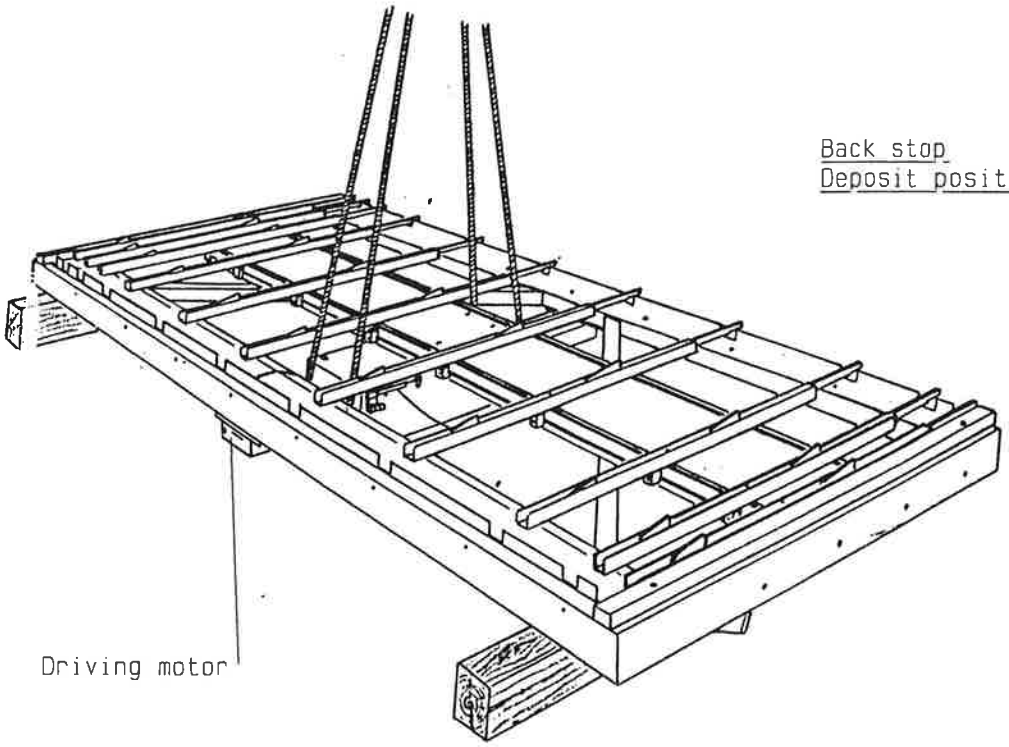

		RAS 74.20	RAS 74.25	RAS 74.30	RAS 74.40 with stop 118.11"	RAS 74.40 with stop 157.48"
L1	inches	134.25"	153.94"	179.92"	213.78"	213.78"
L2	inches	88.58"	108.27"	134.25"	168.11"	168.11"
L3	inches	92.52"	112.20"	138.19"	172.05"	172.05"
L4	inches	116.14"	135.83"	161.81"	195.67"	195.67"
L5	inches	80.3"	100"	126"	126"	161.02"
wight	lbs.	10270	11195	12340	14540	15040
wight	kg	4660	5070	5590	6590	6820

stop depth		B max
61.02"	inches	78.74"
80.71"	inches	98.42"
100.39"	inches	124.02"
120.08"	inches	142.52"
139.76"	inches	162.21"
159.45"	inches	181.89"

* Minimum distance to ambient fixed parts > 20"

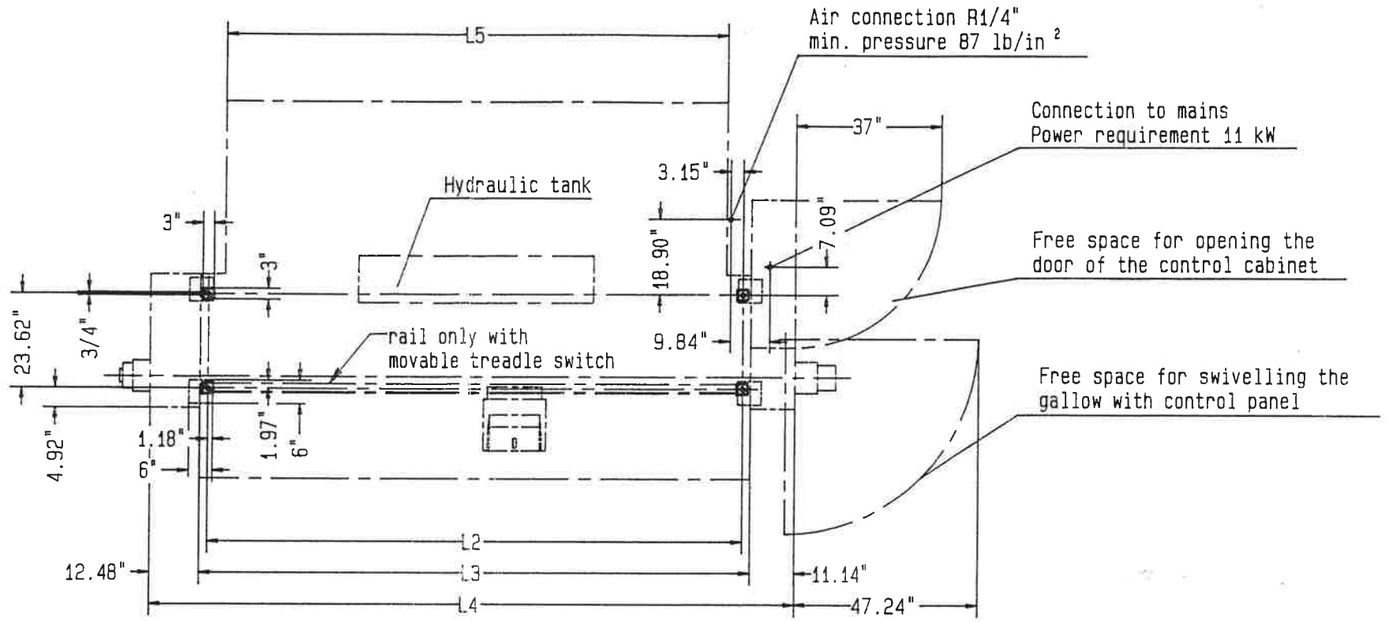

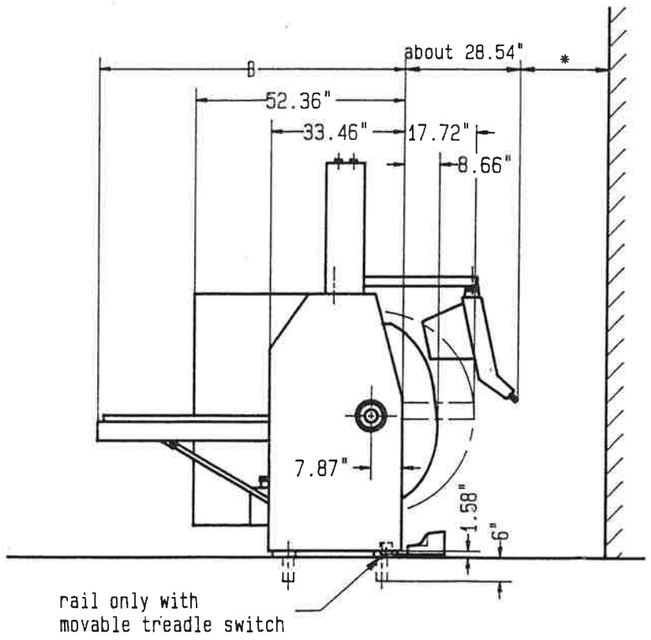

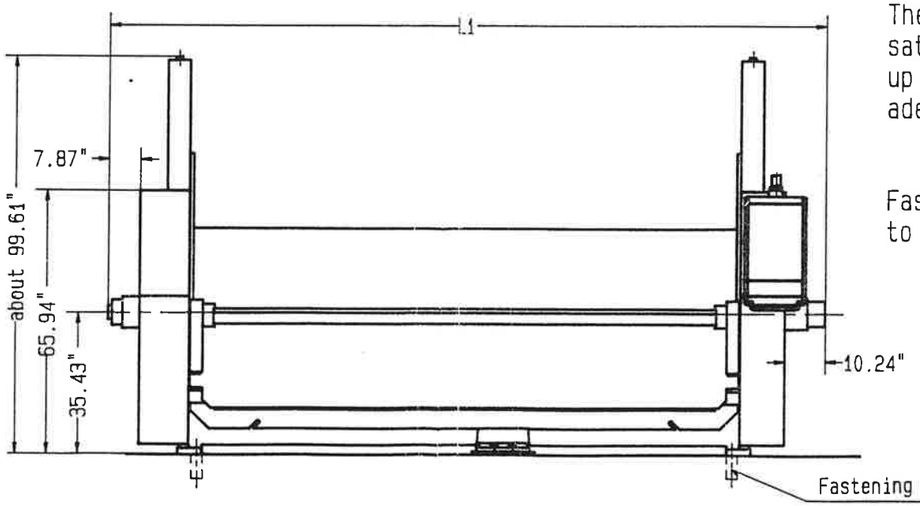

The ground must be dimensioned satisfactorily in order to take up the weight of machine with adequate safety.

Fastening bolts do not belong to our supply

Ohne unsere Genehmigung darf diese Zeichnung weder kopiert, noch vervielfältigt, noch dritten Personen oder Konkurrenzfirmen zugänglich gemacht werden.
(§ 1 u. 11 des Gesetzes vom 19.7.1901)

D - 71065 SINDELFINGEN
RICHARD-WAGNER-STR. 4-10

REINHARDT
MASCHINENBAU
G M B H

1993	Tag	Name
Bearb.	3.6.	Fischer
Gepr.		
Norm.		

Foundationplan for
swivel bending machine

RAS 74.20-25-30-40

MULTIBEND 9000

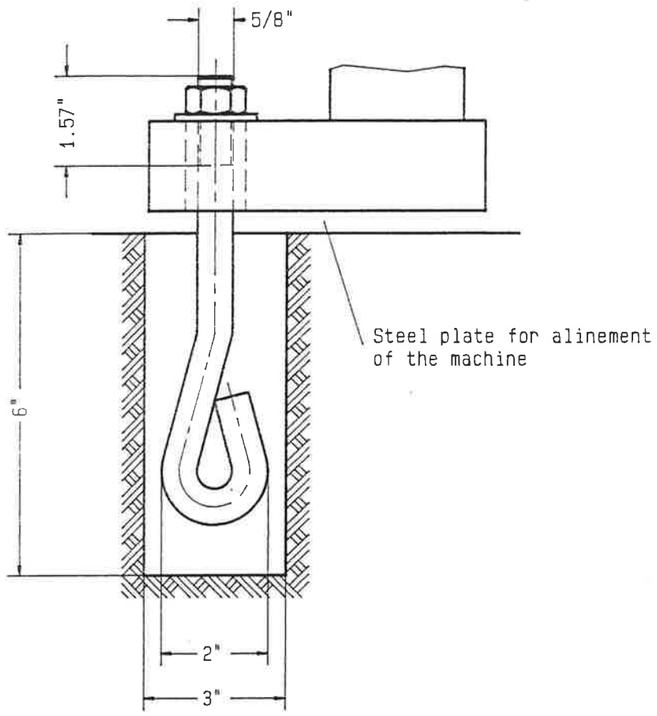

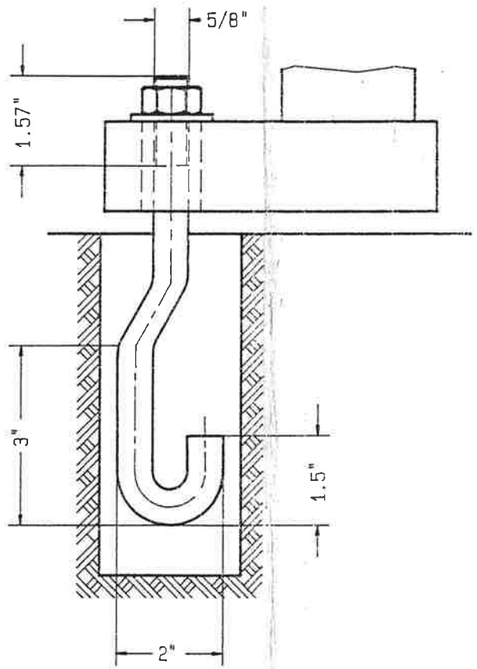

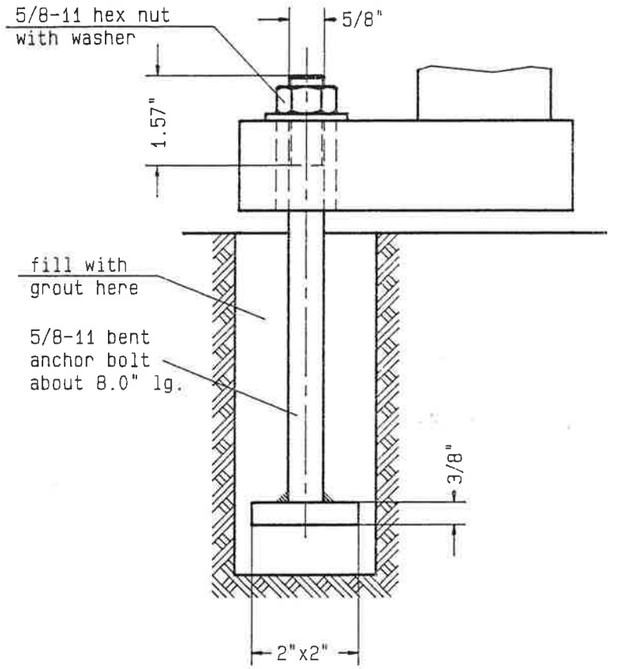

Ohne unsere Genehmigung darf diese Zeichnung weder kopiert, noch vervielfaeltigt, noch dritten Personen oder Konkurrenzfirmen zugaenglich gemacht werden.
(i. u. ii des Gesetzes vom 19.7.1901)

REINHARDT MASCHINENBAU
GmbH
D-7032 SINDELFINGEN

	1993	Tag	Name
Bearb.		5.3.	Noth.
Gepr.			
Norm.			

Illustration for fastening
to the ground
(vide foundation plan, too)

RAS 74.20-25-30-40

MULTIBEND 9000

Set in line by means of a frame water level at guidings-in case detach covers of guidings!

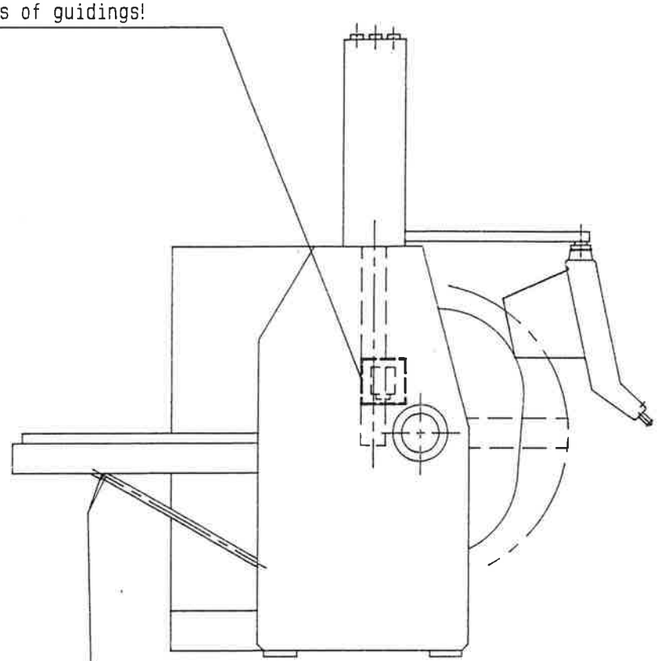

note

red to red
green to green

Place frame water level at support of lower beam! (Upper beam opened)

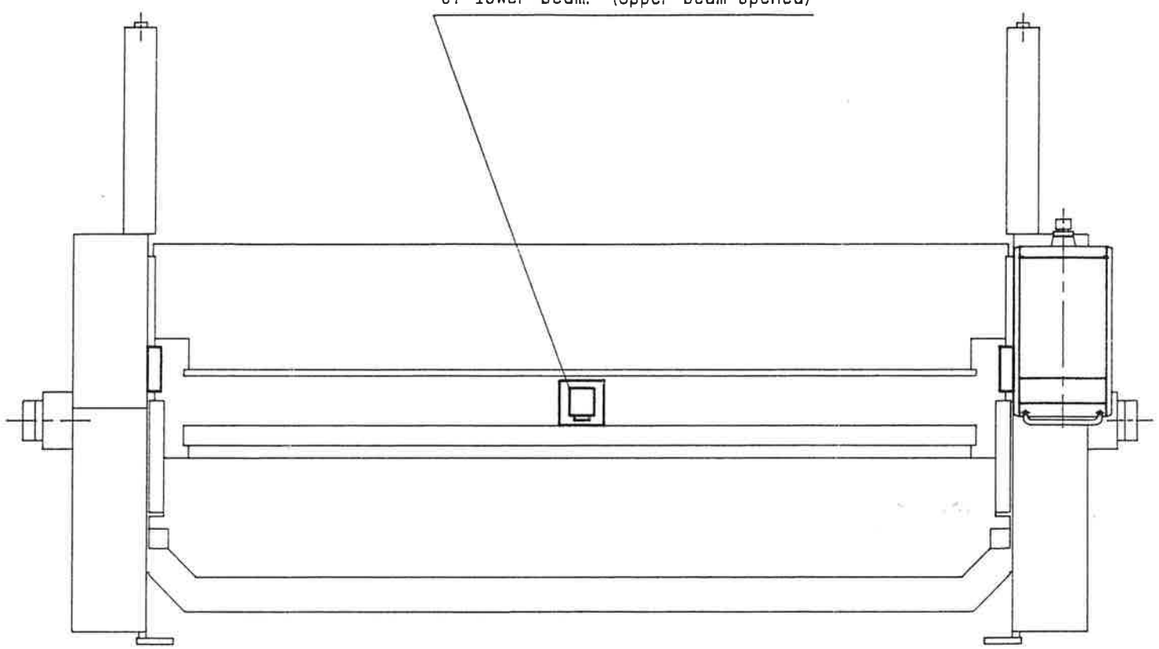

Frame water level as measuring instrument
Frame water level minimum accuracy 0.0012" each 3 feet

Ohne unsere Genehmigung darf diese Zeichnung weder kopiert, noch vervielfaeltigt, noch dritten Personen oder Konkurrenzfirmen zugaenglich gemacht werden.
(§ u. §§ des Gesetzes vom 19.7.1901)

REINHARDT MASCHINENBAU
GmbH
D-7032 SINDELFINGEN

1991	Tag	Name
Bearb.	7.11.	Fischer
Gepr.		
Norm.		

Installation plan for swivel bending machine

RAS 74.20-25-30-40

MULTIBEND 9000

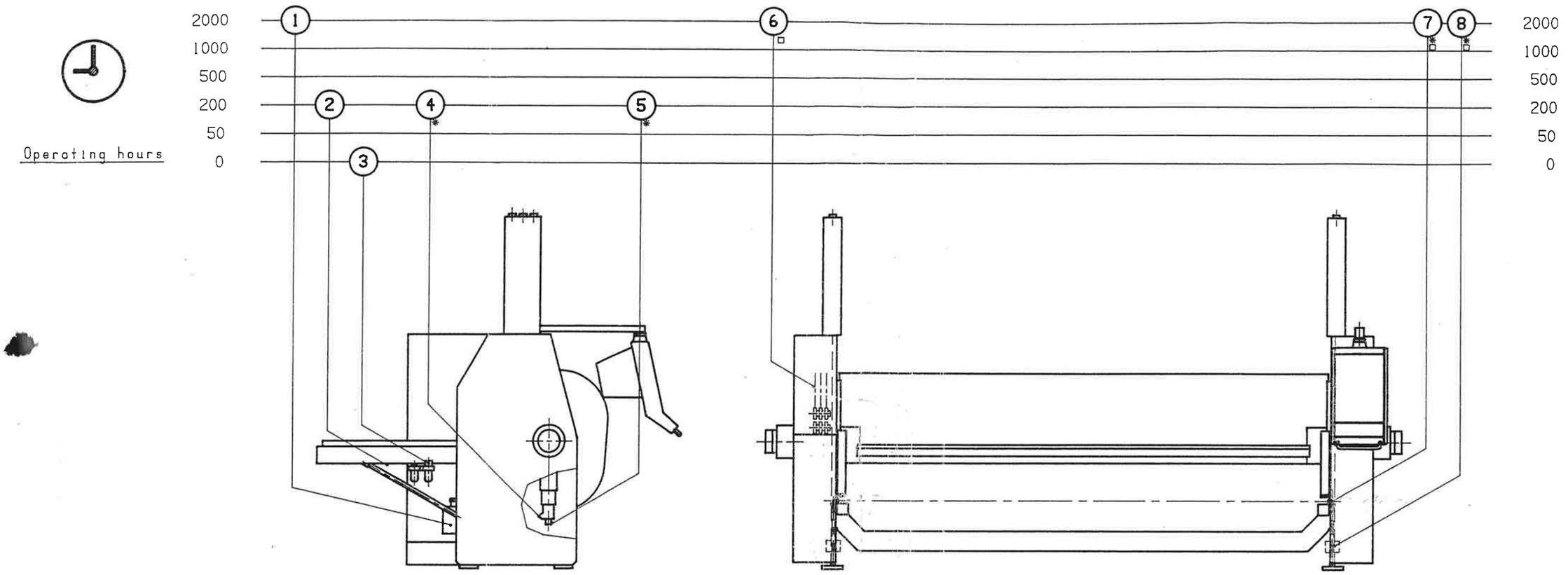

The lubrication instruction corresponds to the recommendations of DIN 8659

machine components		hydraulic tank	ball bearing spindle	maintenance unit	screw and wheel drive	adjustment spindle	roller chain	bevel wheels	thread adjusting drive
lubrication point		1	2	3	4	5	6	7	8
symbol / type of lubrication									
grease	(h)					200	2000	2000	2000
relubricate	(h)		200		200				
exchange	(h)	2000							
check and top up	(h)			8					
lubricant to	ISO 3498-1979								
	DIN 8659 T.z.								
	lubricant table RAS	B	E	C	F	F	F	F	F
container capacity	(galls.)	21		0.13					

Non-indicated lubricating points e.g. bearings, guides, spindles, gear teeth and joints for manual adjustment are to be lubricated as required.

Lubricating points 4-8 on both sides!

at frequent adjustment reasonable more

dismount cover plate

Ohne unsere Genehmigung darf diese Zeichnung weder kopiert,noch vervielfältigt, noch dritten Personen oder Konkurrenzfirmen zugänglich gemacht werden.
(§ 9, 11 des Gesetzes vom 19.7.1901)

REINHARDT MASCHINENBAU GmbH
D-7032 SINDELFINGEN

	1993	Tag	Name
Bearb.		4.3.	Noth.
Gepr.			
Norm.			

Lubricating instruction for swivel bending machine.

RAS 74.20-25-30-40

MULTIBEND 9000

Grease Schedule - Maker's Code

For greasing of our machines we recommened using the following greases

RAS-Maker's code	A	B	C	D	E	F
designation	greasing oil fo gear and bearings	hydraulic oil with detergent effect	special oil for pneu-matic service unit	special gear oil	grease for glide-and antifriction bearing	gear grease for open pinions
	Viskosity 46 cSt to 104 F (40° C)	Viskosity 46 cSt to 104 F (40° C)	Viskosity 10 cSt to 104 F (40° C)	Viskosity 220 cSt to 104 F (40° C)		
BP	BP Energol HLP-D 46 BP Energol HLP 46 BP Energol GR-XP 46 BP Auto Hydraulic Oil 46	BP Energol HLP-D 46	BP Energol HLP 10 BP Auto Hydraulic Oil 10	BP Energol GR-XP 220 BP Gear Oil EP 90	BP Energrease LS 2 BP Energrease L2	BP Energol GR 3000-2 BP Energol WRP
Esso	Nuto H46	XD3+20W20	Spinesso 10	Spartan EP 220	Beacon 2	Surrett Fluid 4 K
TEXACO	Rando 46 Rando HD B 46	Alcor DD 46	Rando HD A 10	Meropa 220 Geartex EP-A 80W-90	Multifak 20 Multifak EP2 Texando FO 20	Crater Special 2xFluid Crater Special 5xFluid
Mobil	Mobil DTE 25 Mobil Delvac 1210	Mobil DTE 25 Mobil Delvac 1210	Mobil Velocite Oil No. 6	Mobilgear 630 Mobilube GX 85W-90-A	Mobilux 2 Mobilux EP2	
Shell	Shell Tellus Oil 46	Shell Hydrol DO 46 Shell Rotella T 10W	Shell Tellus Oil 10	Shell Omala Oil 220	Shell Alvania Grease 2	Shell Malleus Fluid C Shell Malleus Fluid D

Order of indicated grease manufacturers means no classification of grease quality.

00.00F 1 9

D - 71065 SINDELFINGEN
RICHARD-WAGNER-STR. 4-10

Tel. 07031 - 863 - 0
TELEFAX 07031-863-185

RAS
REINHARDT MASCHINENBAU G M B H

USA

	lubrication		tank
	oil lubrication, general		fill in, inlet
	central lubrication system for oil, manual		draining, outlet
	central lubrication system for oil, automatic		exchange tank content
	grease lubrication, general		level indicator
	central lubrication system for grease, manual		fill up to level
	central lubrication system for oil, automatic		separator, general
	grease lubrication with brush		filter, general

R A S

Symbol description for lubrication instruction

4.12.1991 Fischer

Sharp rail 45 °

Adjustment of lower beam and folding beam for folding till 135°

z.B. e=1,25x0.12"=0.15" **e=1,25xs**

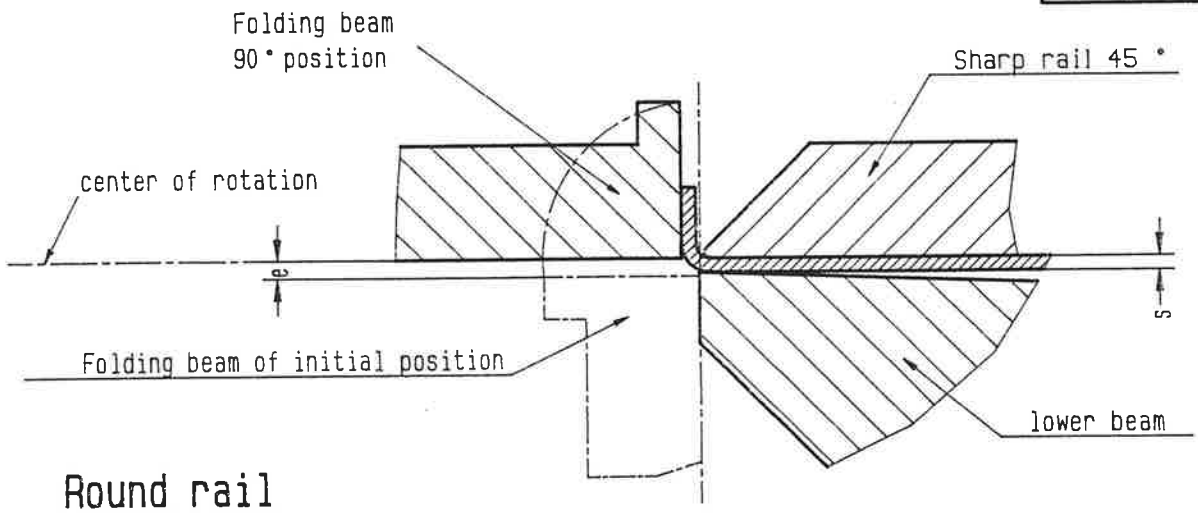

Round rail

Adjustment of lower beam and folding beam

z.B. e=(0.59"+0.08")=0.67" **e= R+s**

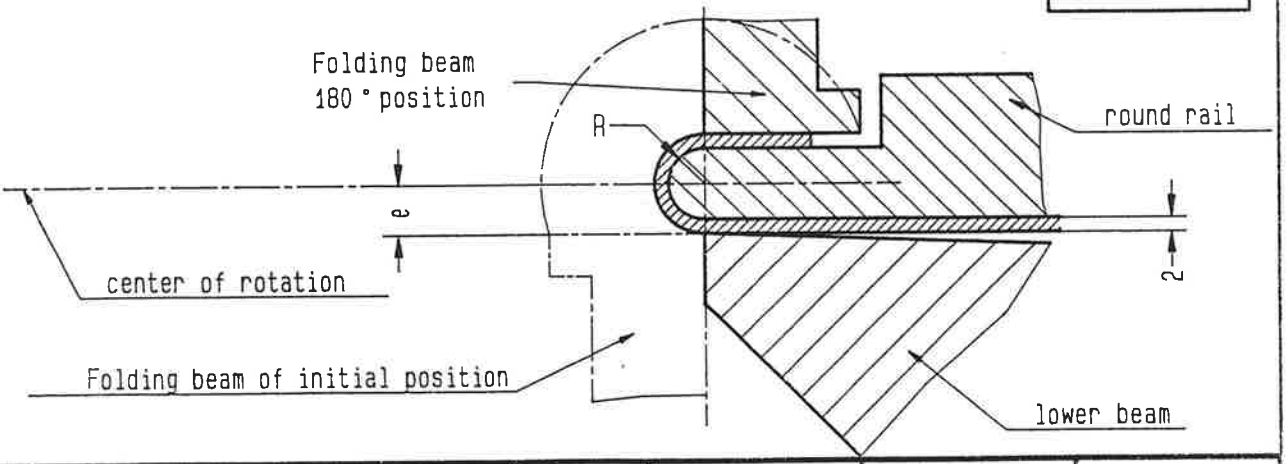

Stück	Benennung	Sach-Nr.	Werkstoff	Rohmaße	Bemerkung

Ohne unsere Genehmigung darf diese Zeichnung weder kopiert, noch vervielfältigt, noch dritten Personen oder Konkurrenzfirmen zugänglich gemacht werden.
(§ 1 u. 11 des Gesetzes vom 19. 7. 1901)

REINHARDT MASCHINENBAU GmbH
7032 SINDELFINGEN

	1993	Tag	Name
Bearb		4.3.	Noth.
Gepr.			
Norm			

Example of adjustment for folding for swivel bending machine

Maßstab

RAS 74.20-25-30-40

MULTIBEND 9000

Aus-gabe	Änderung	Tag	Name

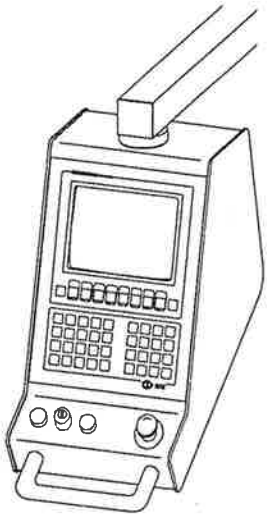

Control panel
(vide separate and attached
operating instructions
"NC control MULTIBEND 9000")

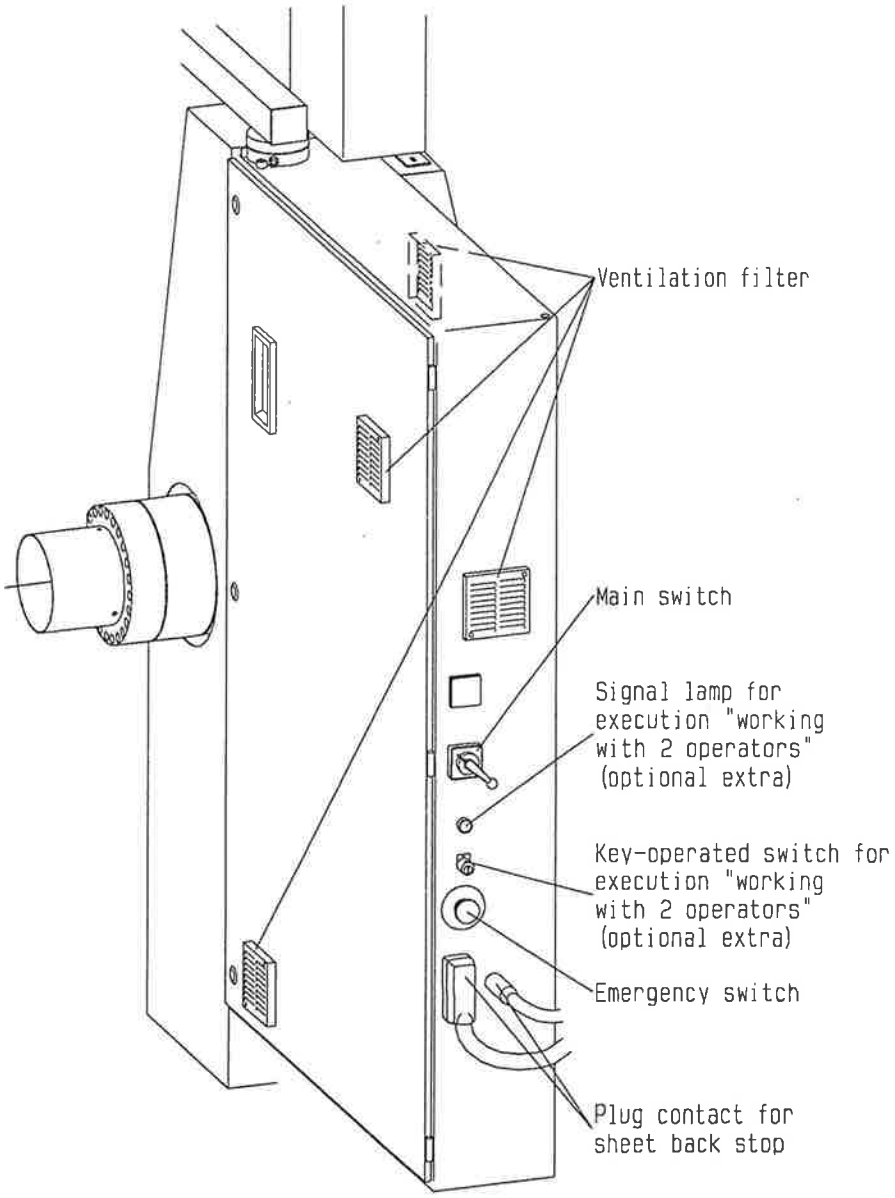

Control cabinet
RAS 74.20-25-30-40
MULTIBEND 9000

Graph for determination of max. sheet thickness to be folded as a function of the folding length and the tensile strength.

Diagram is referred to standard blade of 45° for the upper beam and folding blade of 1.18" width.
Max. sheet thickness may be reduced using different blades. Admissible values to be inquired at the manufacturer.

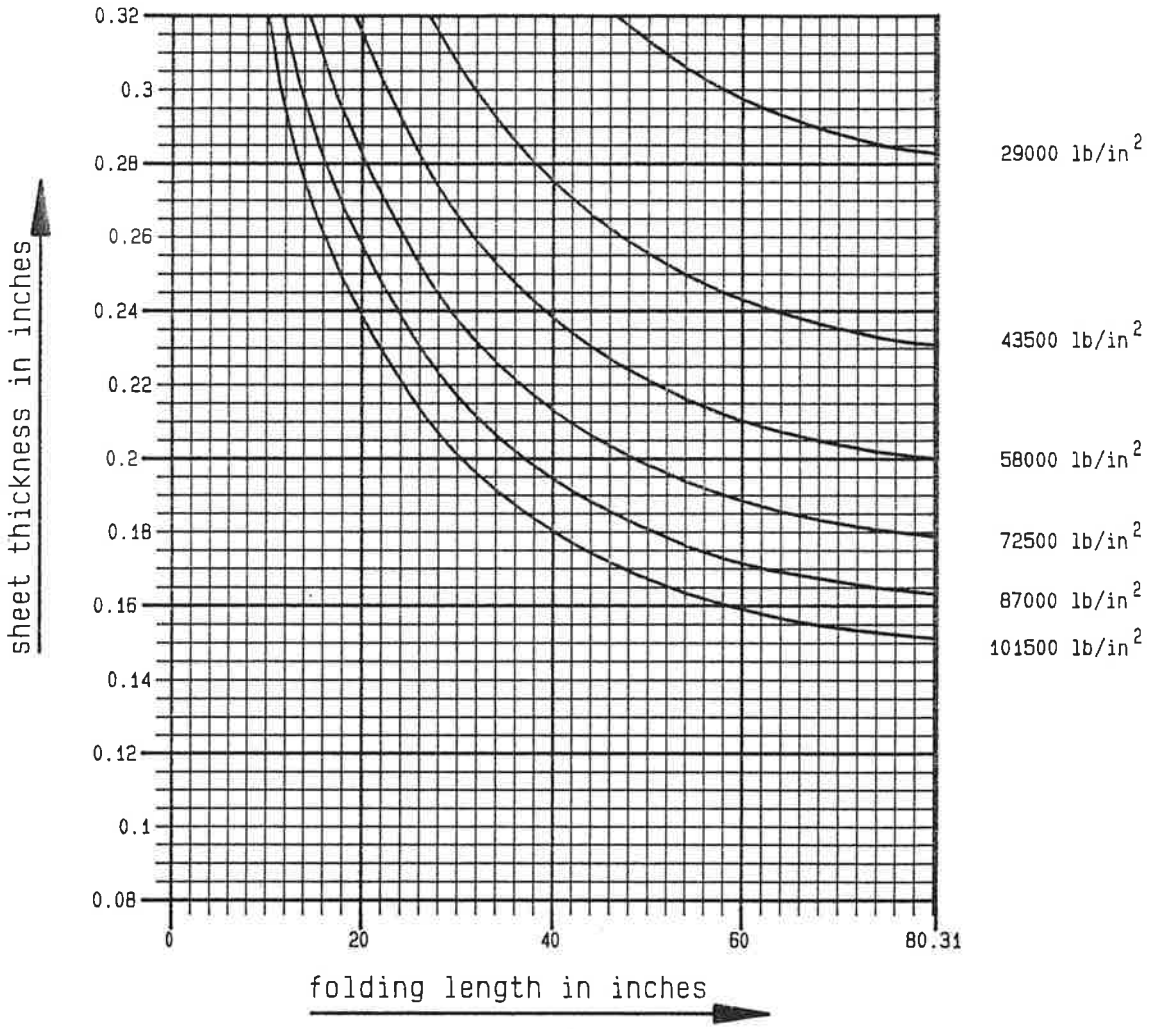

When bending narrow sheets, insert dummy sheets of the same thickness between upper and lower beam!

Stück	Benennung	Sach-Nr.	Werkstoff	Rohmaße	Bemerkung

Ohne unsere Genehmigung darf diese Zeichnung weder kopiert, noch vervielfältigt, noch dritten Personen oder Konkurrenzfirmen zugänglich gemacht werden.
(§ 1 u. 11 des Gesetzes vom 19. 7. 1901)

REINHARDT MASCHINENBAU GmbH
7032 SINDELFINGEN

	1991	Tag	Name
Bearb.		12.11.	Noth.
Gepr.			
Norm.			

Performance graph for swivel bending machine

Maßstab

RAS 74.20

Ausgabe	Änderung	Tag	Name

Graph for determination of max. sheet thickness to be folded as a function of the folding length and the tensile strength.

Diagram is referred to standard blade of 45° for the upper beam and folding blade of 1.18" width.
Max. sheet thickness may be reduced using different blades. Admissible values to be inquired at the manufacturer.

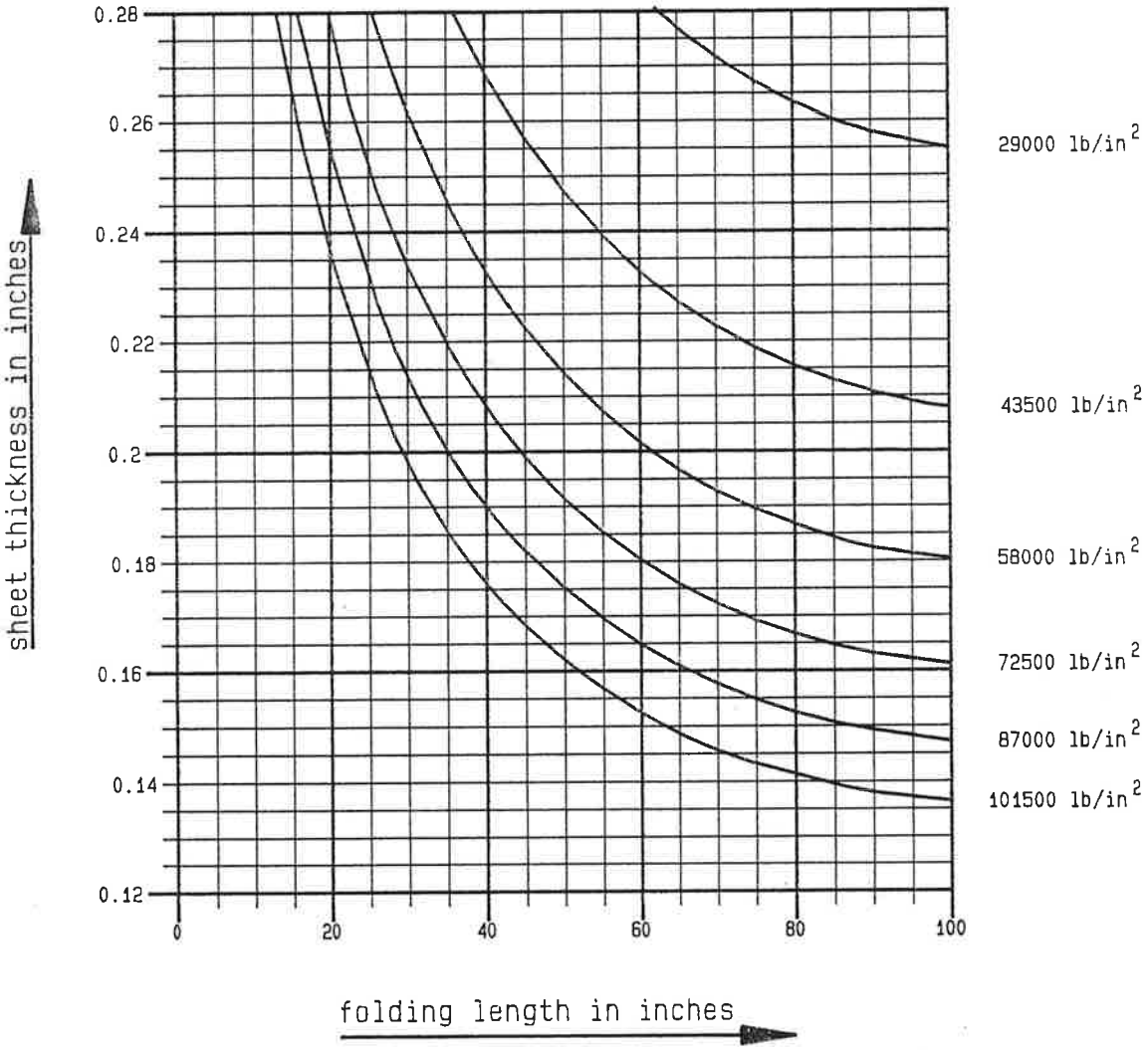

When bending narrow sheets, insert dummy sheets of the same thickness between upper and lower beam!

Stück	Benennung	Sach-Nr.	Werkstoff	Rohmaße	Bemerkung

Ohne unsere Genehmigung darf diese Zeichnung weder kopiert, noch vervielfältigt, noch dritten Personen oder Konkurrenzfirmen zugänglich gemacht werden.
(§ 1 u. 11 des Geseizes vom 19. 7. 1901)

1991	Tag	Name
Bearb.	13.11.	Noth.
Gepr.		
Norm.		

Ausgabe	Änderung	Tag	Name

RAS

REINHARDT MASCHINENBAU GmbH
7032 SINDELFINGEN

Performance graph for swivel bending machine

Maßstab

RAS 74.25

Graph for determination of max. sheet thickness to be folded as a function of the folding length and the tensile strength.

Diagram is referred to standard blade of 45° for the upper beam and folding blade of 1.18" width.
Max. sheet thickness may be reduced using different blades. Admissible values to be inquired at the manufacturer.

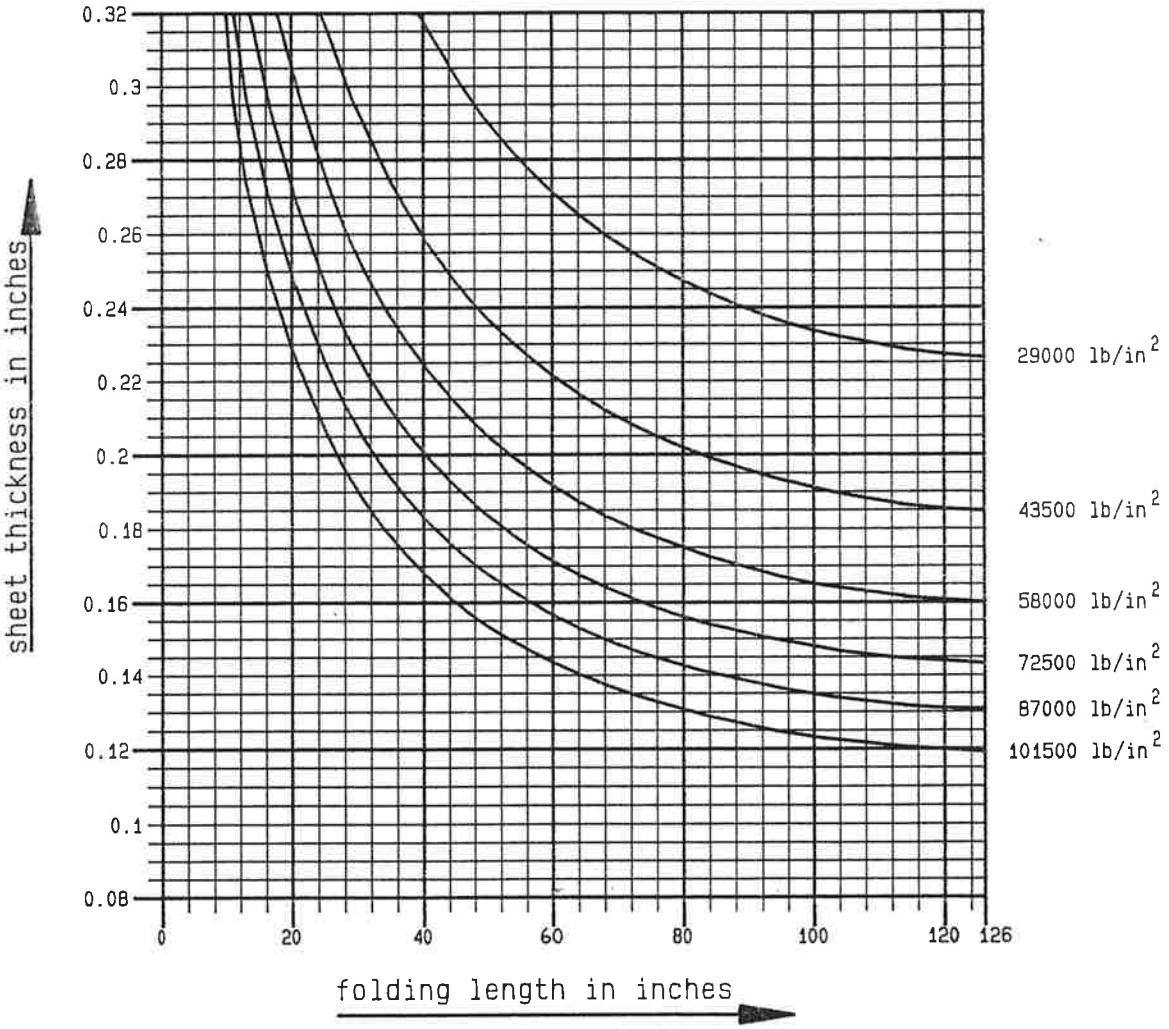

When bending narrow sheets, insert dummy sheets of the same thickness between upper and lower beam!

Stück	Benennung	Sach-Nr.	Werkstoff	Rohmaße	Bemerkung

Ohne unsere Genehmigung darf diese Zeichnung weder kopiert, noch vervielfältigt, noch dritten Personen oder Konkurrenzfirmen zugänglich gemacht werden.
(§ 1 u. 11 des Gesetzes vom 19. 7. 1901)

	1991	Tag	Name
Bearb.		11.11.	Noth.
Gepr.			
Norm.			

REINHARDT MASCHINENBAU GmbH
7032 SINDELFINGEN

Performance graph for swivel bending machine

Maßstab

RAS 74.30

Ausgabe	Änderung	Tag	Name

Graph for determination of max. sheet thickness to be folded as a function of the folding length and the tensile strength.

Diagram is referred to standard blade of 45° for the upper beam and folding blade of 1.18" width.
Max. sheet thickness may be reduced using different blades. Admissible values to be inquired at the manufacturer.

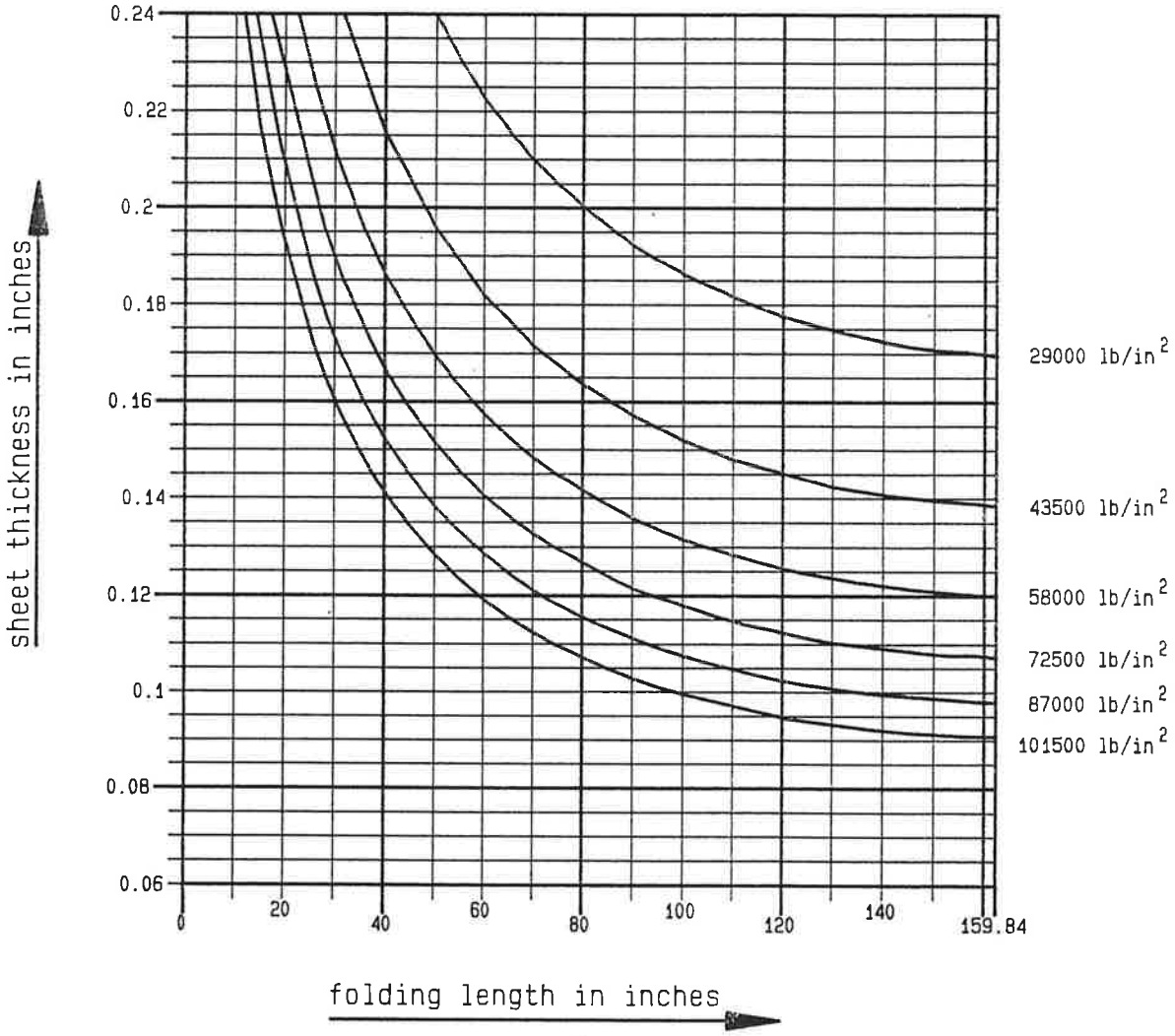

When bending narrow sheets, insert dummy sheets of the same thickness between upper and lower beam!

Stück	Benennung	Sach-Nr.	Werkstoff	Rohmaße	Bemerkung

Ohne unsere Genehmigung darf diese Zeichnung weder kopiert, noch vervielfältigt, noch dritten Personen oder Konkurrenzfirmen zugänglich gemacht werden.
(§ 1 u. 11 des Gesetzes vom 19. 7. 1901)

REINHARDT MASCHINENBAU GmbH
7032 SINDELFINGEN

1991	Tag	Name
Bearb.	13.11.	Noth.
Gepr.		
Norm.		

Performance graph for swivel bending machine

Maßstab

RAS 74.40

Ausgabe	Änderung	Tag	Name

① 131105 *339,33
⑬ 131103

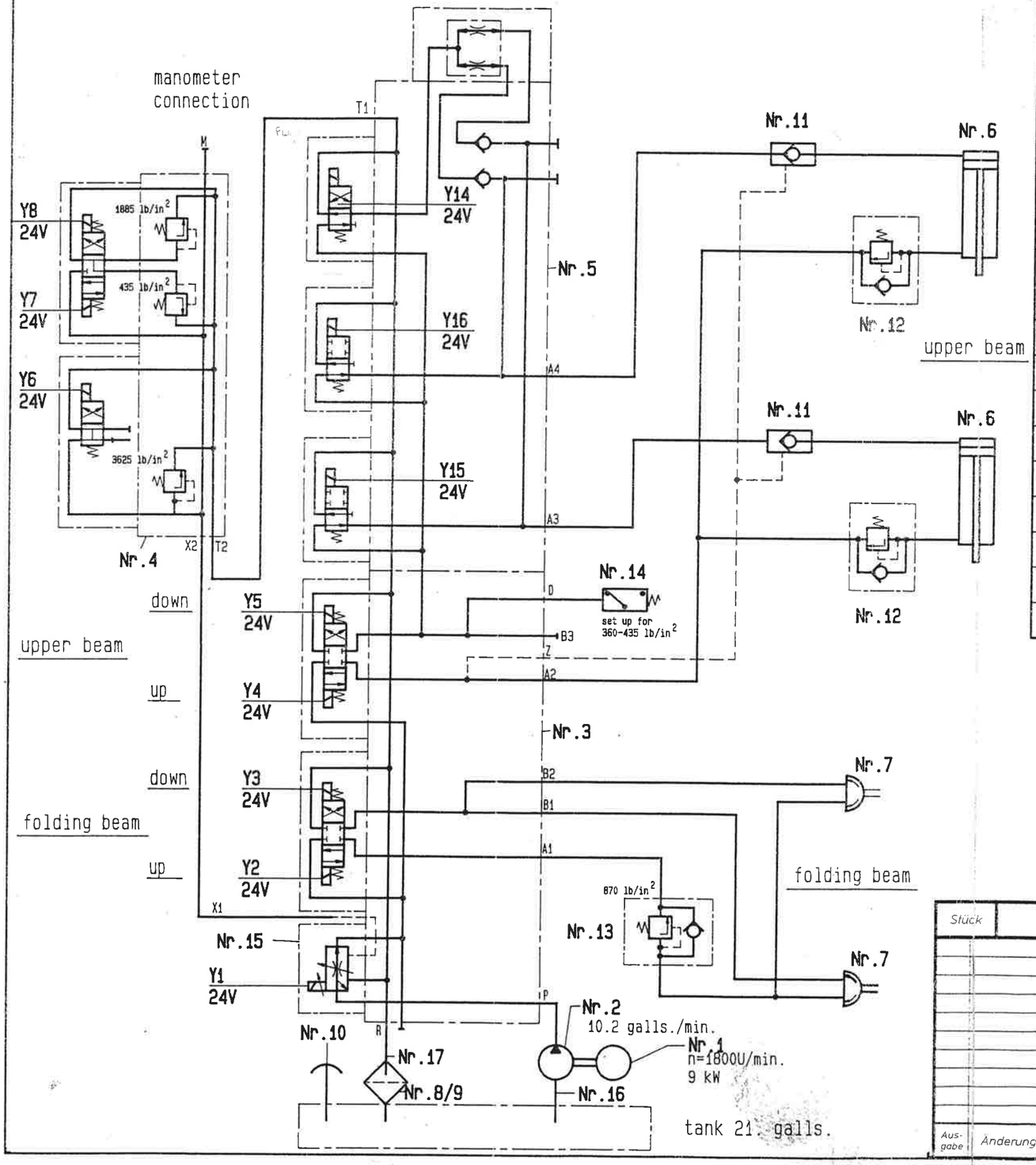

no.	denomination	type	manufacturer	part-no.
1	d-motor with therm.-protect.	132 M/4	Dietz	153 891
2	pump with internal gear	IPH 4-25	Voith	093 850
3	control block	1R-41/94-10/1	Aros/Bosch	147 480
4	pilot control block	1R-41/94-20/1	Aros/Bosch	
5	additional control block	1R-41/191-10	Aros/Bosch	147 481
6	hydraulic-cylinder		RAS	130 887
7	rotary piston cylinder	LDK 200	Suedhydraulik	130 410
8	return filter	67 301 62 286	Mann und Hummel	135 407
9	spare cartridge	H68/1 67 301 56 196	Mann und Hummel	135 408
10	filling filter	02 200 21 002	Mann und Hummel	135 406
11	pilot controlled check valve	RH 3 V	Hawe	131 105
12	pressure relief valve	SVC 53F-12	Hawe	131 103
13	pressure relief valve	SVC 53F-60	Hawe	131 104
14	hydr. pressure switch	9059	Suco	135 315
15	proport. current regul. valve	SE 3 3P G24	Hawe	132 200
16	ransparent-flexible tube	no.720	Fischer	057 840
17	rubber oil tube	0.98"x1.18"	Weigelt und Soehne	097 140

Set up values of valves no. 12 at

RAS 74.20 - 290.1 lb/in²
RAS 74.25 - 362.6 lb/in²
RAS 74.30 - 435.1 lb/in²
RAS 74.40 - 507.6 lb/in²

Stück	Benennung	Sach-Nr.	Werkstoff	Rohmaße	Bemerkung

Ohne unsere Genehmigung darf diese Zeichnung weder kopiert, noch vervielfältigt, noch dritten Personen oder Konkurrenzfirmen zugänglich gemacht werden (§ 1 u. 11 des Gesetzes vom 19. 7. 1901)

	1993	Tag	Name
Bearb.		4.3.	Noth.
Gepr.			
Norm			

Ausgabe	Änderung	Tag	Name

REINHARDT MASCHINENBAU GmbH
7032 SINDELFINGEN

Hydraulic-control-diagram with equipment list

Maßstab

RAS 74.20-25-30-40

MULTIBEND 9000

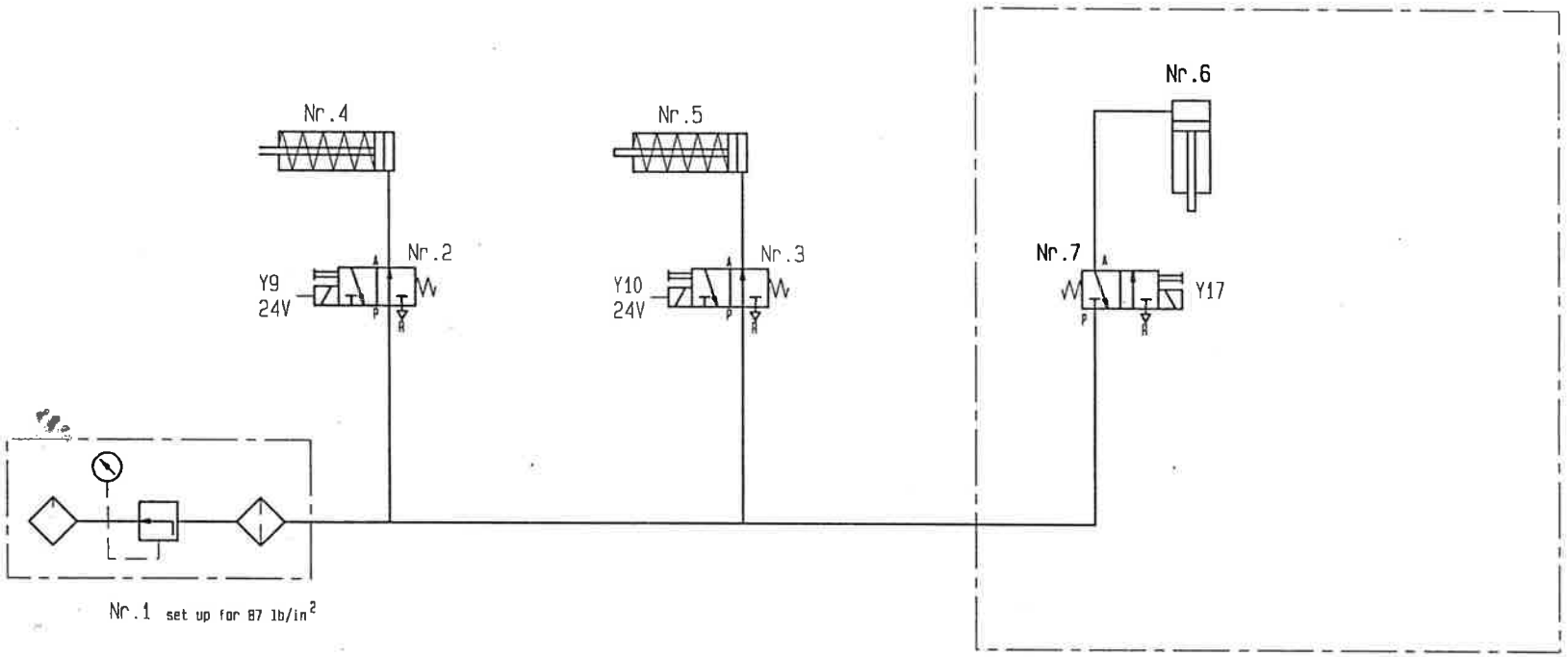

adittional features

automatic tool-system with automatic clamping

pos.	denomination	type	manufacturer	order-no.
1	service unit R 1/4"	No.825H with 75/1	Riegler	043 120
2	solenoid valve	MOFH-3-M5	Festo	132 587
3	solenoid valve	MOFH-3-M5	Festo	132 587
4	cylinder	ESN 20-25P	Festo	114 609
5	cylinder	ESN 20-25P	Festo	114 609
6	clamping rail cpl.		RAS	156 011
7	solenoid valve	MFH-3-M5	Festo	125 604

Ohne unsere Genehmigung darf diese Zeichnung weder kopiert, noch vervielfältigt, noch dritten Personen oder Konkurrenzfirmen zugänglich gemacht werden.
(§ 1 u. 11 des Gesetzes vom 19.7.1901)

D - 71065 SINDELFINGEN
RICHARD-WAGNER-STR. 4-10

RAS

REINHARDT MASCHINENBAU G M B H

	Tag	Name
1993		
Bearb.	03.02.	Fischer
Gepr.		
Norm.		

Pneumatic circuit diagram

Maßstab

RAS 74.20-25-30-40

MULTIBEND 9000

RIEGLER & CO KG
7417 URACH/WÜRTT.

Postfach 1309 Telefon (07125) 291÷292
Teckstraße 7 Telex 07245519
Germany – Alemania

RIEGLER
Druckluft-Armaturen

Installation and Operating Instructions for Maintenance Units

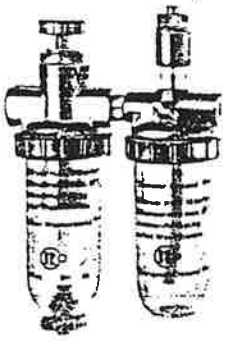

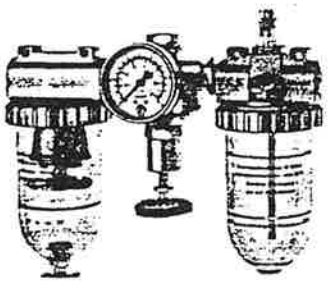

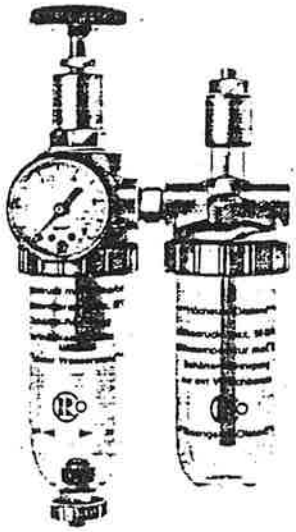

Normally, maintenance units consist of oil and water separators, pressure reducers and lubricators and serve the purpose of cleaning operationally used compressed air from liquid and solid foreign particles, controlling the air pressure and permeating the air with finely dispersed oil for lubricating cylinders, valves, air-controlled tools and the like.

When properly used to match the pertinent operating conditions they will stabilize the efficiency of pneumatic systems and increase their life.

Installation:

Sequence in normal cases (in direction of arrow) OIL AND WATER SEPARATOR - PRESSURE REDUCER - LUBRICATOR, with the SHORTEST POSSIBLE DISTANCE toward source.

Oil and water separator:

Compressed air contains condensate, pipe line scale, rust particles and the like, which attack pneumatically controlled and operated tools, pressure cylinders, valves, etc. and have a disruptive influence on their function.

The purification of the compressed air is therefore an indispensable requirement, which is effected by an oil and water separator.

The degree of cleaning from solid and liquid particles depends on the pore size (standard 50-75 my) of sinter filter. Filters with smaller pore size can be optionally installed.

Pressure reducer:

The line pressure of a compressed air system fluctuates in accordance with the size of the compressor (for example 85-140 or 140-230 psi etc.). Pressure reducers will reduce this fluctuating line pressure (initial pressure) to the desired operating pressure.

Lubricator:

The lubricator enriches the compressed air with a fine oil fog and thereby provides a constant and reliable lubrication of pneumatically controlled air-operated tools, cylinders, valves etc.

Oil and water separator:

Maintenance: Drain condensate daily, if possible. Clean filter insert regularly.

Disassembly: Loosen screw connection, remove container, remove fastening nut from sinter filter, take out filter, place filter into solution (for example gasoline, tri etc.), shake well and dry, then reinstall. Watch out for perfect sealing.

Pressure reducer: No maintenance required.

Maintenance units are normally using pressure reducers with reversing controls. The advantage of pressure reducers employing reversing controls is that the pressure can be reduced without a need for bleeding air by simply turning the control screw backwards. In addition, the reactions which occur with pneumatic controls will be conducted into the open air by the reversing controll, which serves simultaneously as a safety valve, which will in turn protect the pressure gauge.

Adjusting the pressure:

Prior to operating the compressed air line the pressure reducer must be relieved by turning the control screw out. Then the control screw is again turned in clockwise direction until the pressure gauge on the pressure reducer indicates the desired operating pressure.

Lubricator:

Models No. 745 A and B, 750 A and B, 760 C.

Please note:

The operation of a standard lubricator depends on the underpressure which is created in the sight glass of the lubricator by the air flow. A MINIMUM OPERATING PRESSURE OF 7 psi is required. In addition, the air consumption (air flow) stated on the table must be maintained.

Installation:

Filler screw forward (the lubricators operate in any direction), check pipe line for cleanliness prior to installation of lubricator (pipe line scale, thread-cutting chips, hemp, etc.).

Oil grade:

2.5-7°E (16-55 cSt) at 50°C (122°F).
In special cases consult the lubrication engineering departments of the oil companies, whose engineers are available at any time for non-binding and free-of-charge advice covering all lubrication engineering problems.

Filling in of oil:

Disconnect air passage, remove filler screw, fill container up to filling mark (approx. 2/3). Close filler screw well again.

Dosing:

Set required oil quantity (drops per minute) during operation on dosing screw as required. Number of drops is shown in sight glass.

Operating pressure for oil and water separator and lubricator:

with plastic container made of LURAN (blue) max. 142 psi
with plastic container made of CELLIDOR (yellow) max. 228 psi.

Operating temperature:

with plastic container made of LURAN (blue) 10 to+50°C (50 to 122°F)
with plastic container made of CELLIDOR (yellow) 70°C (158°F).

Cleaning of plastic container:

Clean plastic containers with water, kerosene or gasoline only. NEVER USE BENZOLE, ACETONE, CLEANING COMPOUNDS CONTAINING TRI (TRICHLOROETHYLENE) OR THE LIKE.

Minimum air consumption of lubricators in m3/h should not fall below the values underneath.

Pressure	atü	2	4	6
Model 745 A R 1/8"	cu.m/h	2,5	3,4	4,5
Model 745 B R 1/4"	cu.m/h	5,0	6,4	7,6
Model 750 B	cu.m/h	5,0	6,4	8
Model 750 A	cu.m/h	5,0	6,4	8
Model 760 C	cu.m/h	21,0	26,0	40

Minimum air consumption was measured with oil of 2.8°E (50°C).

Oil for light loads

Aral	CMS	2,5 E
BP	HP 10	2,7 E
DEA	Seramit 2	2,4 E
Esso	Esstic 42	2,8 E
Gasolin	TU 504	2,5 E
Mobil	D.T.E. Oil Light	2,9 E
Shell	Tellus Öl 27	3,0 E
Valvoline	ETC Light	3,0 E
Veedol	Avalon 50	3,0 E

Oil for heavy loads

Aral	CMU	3,8 E
BP	HP 20	4,2 E
DEA	Seramit 4	4,8 E
Esso	Esstic 50	4,7 E
Gasolin	TU 518	4,5 E
Mobil	D.T.E. Oil Medium	3,9 E
Shell	Tellus Öl 29	4,0 E
Valvoline	ETC Light 10	4,5 E
Veedol	Avalon 60	5,0 E

automatic	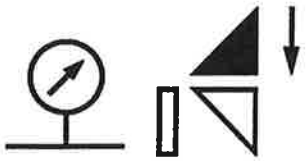 clamping pressure	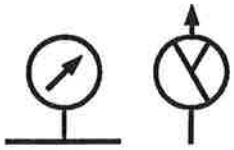 pump pressure
hydraulic	control	main-switch
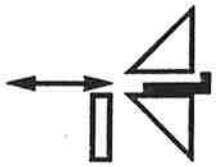 back stop	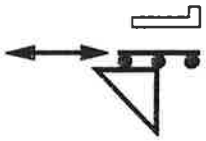 sheet-support	N.C. electronic

RAS

Explanation of symbols for folding machines

4.12.1991 Fischer

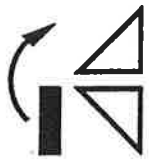 folding-leaf up	folding-leaf down	angle 2
upper beam clamping	upper beam opening	start / on
stop / off	all stop	adjustment

R A S

Explanation of symbols for folding machines

4.12.1991 Fischer

working length	max.plate-thickness	weight
P power required	stroke	pressure
nature of current working voltage		line-fuse
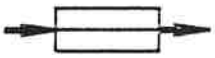 nominal current	A.C. alternating current	control-tension

RAS

Explanation of symbols for type-plates

4.12.1991 Fischer

****
* Projektverzeichnis Datum: 14.10.94 Seite: 1
* Projektpfad /usr/arc/TCS/
****

Projekt	Datenblock (mehrzeilig)	
RAS74-9011UC 23	Proj.bez.:	SWIVEL BENDING MACHINE RAS74.00
	Auftrag :	208V 60HZ USA; 2-SPINDEL STOP; SIO
	Zeichnung:	S 74.00 / 9011UC
	Beschreib:	SWIVEL BENDING MACHINE WITH SERVO-HYDRAULIC DRIVE RAS 74.00 WITH CNC-PROGRAM CONTROL MULTIBEND 9000 US-EXECUTION ; COLORMONITOR ; 8mm STOP UPPERBEAM BACK STOP WITH 2-SPINDEL DC-SERVODRIVE; SIO-CARD FOR STOP WIDTH UP TO 4000mm

****
Ende der Liste

****
* Blattverzeichnis Datum: 14.10.94 Seite: 1
****
* Projekt : RAS74-9011UC * Reinhardt Maschinenbau GmbH
* Proj.bez.: SWIVEL BENDING MACHINE RAS74.00 * Richard-Wagner-Str. 4-10
* Zeichnung: S 74.00 / 9011UC * D-71065 Sindelfingen
* Auftrag : 208V 60HZ USA; 2-SPINDEL STOP; S* Tel.:07031/863-0
****

Ort	Blattbezeichnung	Blatt	Datum	Name
Anlage:				
	CIRCUIT DIAGRAM	1	07.10.94	KOO
	CIRCUIT DIAGRAM	2	07.10.94	KOO
	CIRCUIT DIAGRAM	3	07.10.94	KOO
	CIRCUIT DIAGRAM	4	07.10.94	KOO
	CIRCUIT DIAGRAM	5	07.10.94	KOO
	CIRCUIT DIAGRAM	6	07.10.94	KOO
	CIRCUIT DIAGRAM	7	07.10.94	KOO
	CIRCUIT DIAGRAM	8	07.10.94	KOO
	CIRCUIT DIAGRAM	9	07.10.94	KOO
	CIRCUIT DIAGRAM	10	07.10.94	KOO
	CIRCUIT DIAGRAM	11	07.10.94	KOO
	CIRCUIT DIAGRAM	12	07.10.94	KOO
	CIRCUIT DIAGRAM	13	07.10.94	KOO
	CIRCUIT DIAGRAM	14	07.10.94	KOO
	CONNECTION DIAGRAM	15	07.10.94	KOO
	CONNECTION DIAGRAM	16	07.10.94	KOO
	CONNECTION DIAGRAM	17	07.10.94	KOO
	CONNECTION DIAGRAM	18	07.10.94	KOO
	CONNECTION DIAGRAM	19	07.10.94	KOO
	CONNECTION DIAGRAM	20	07.10.94	KOO
	CONNECTION DIAGRAM	21	07.10.94	KOO
	INSTALLATION SCHEME	22	07.10.94	KOO
	INSTALLATION SCHEME	23	07.10.94	KOO

****
Ende der Liste

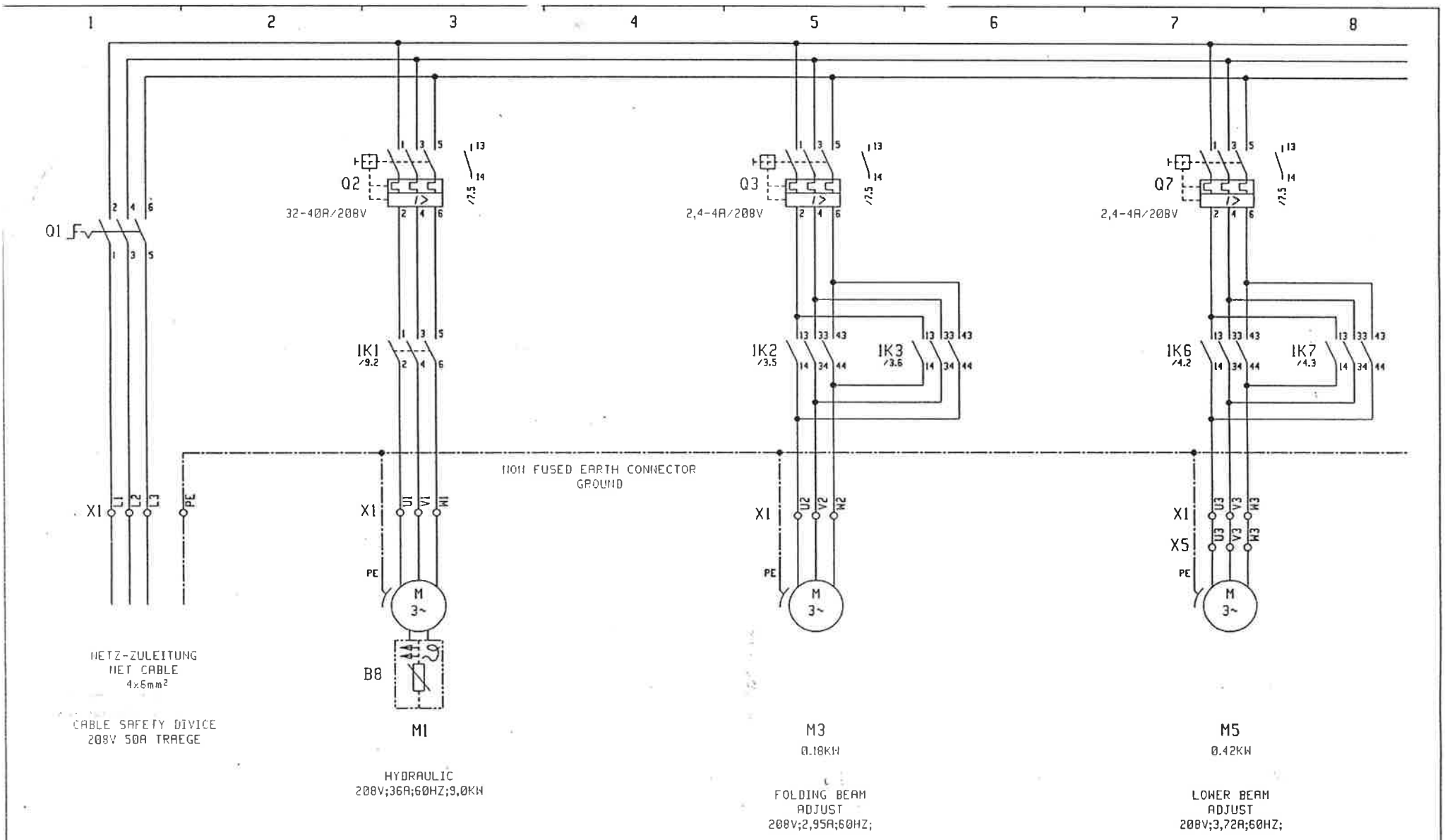

	Änderung	Datum	Name		Datum	Name
a						
b						
c				gez.	07.10.94	K00
d						
e				gedruckt	14.10.94	

REINHARDT MASCHINENBAU
GmbH
D-71065 SINDELFINGEN

Bez.	CIRCUIT DIAGRAM	Zeichn.-Nr.: S 74.00 / 9011UC	Ort:
Projektbez.	SWIVEL BENDING MACHINE RAS74.00	Auftrag: 208V 60HZ USA; 2-SPINDEL STOP; SIO	Anlage: Bl.: 1 von: 23

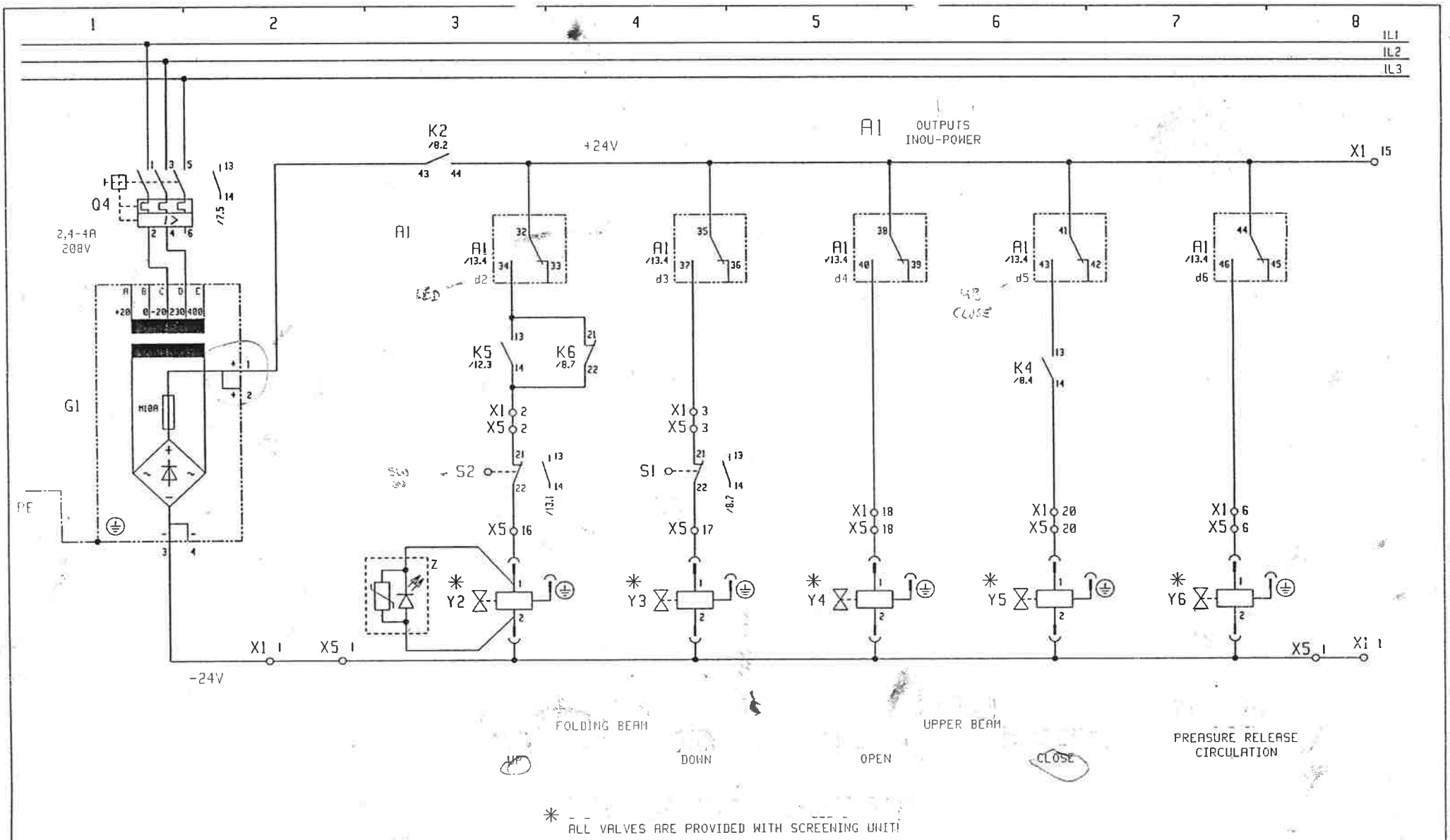

	Änderung	Datum	Name		Datum	Name
a						
b	A1 INOU-POWER NEU	28.09.94	K00	gez.	07.10.94	K00
c						
d				gedruckt	18.10.94	
e						

REINHARDT MASCHINENBAU GmbH
D-71065 SINDELFINGEN

Bez. CIRCUIT DIAGRAM	Zeichn.-Nr.: S 74.00 / 9011UC	Ort:	Anlage:
Projektbez. SWIVEL BENDING MACHINE RAS74.00	Auftrag: 208V 60HZ USA; 2-SPINDEL STOP; SIO		Bl.: 2 von: 23

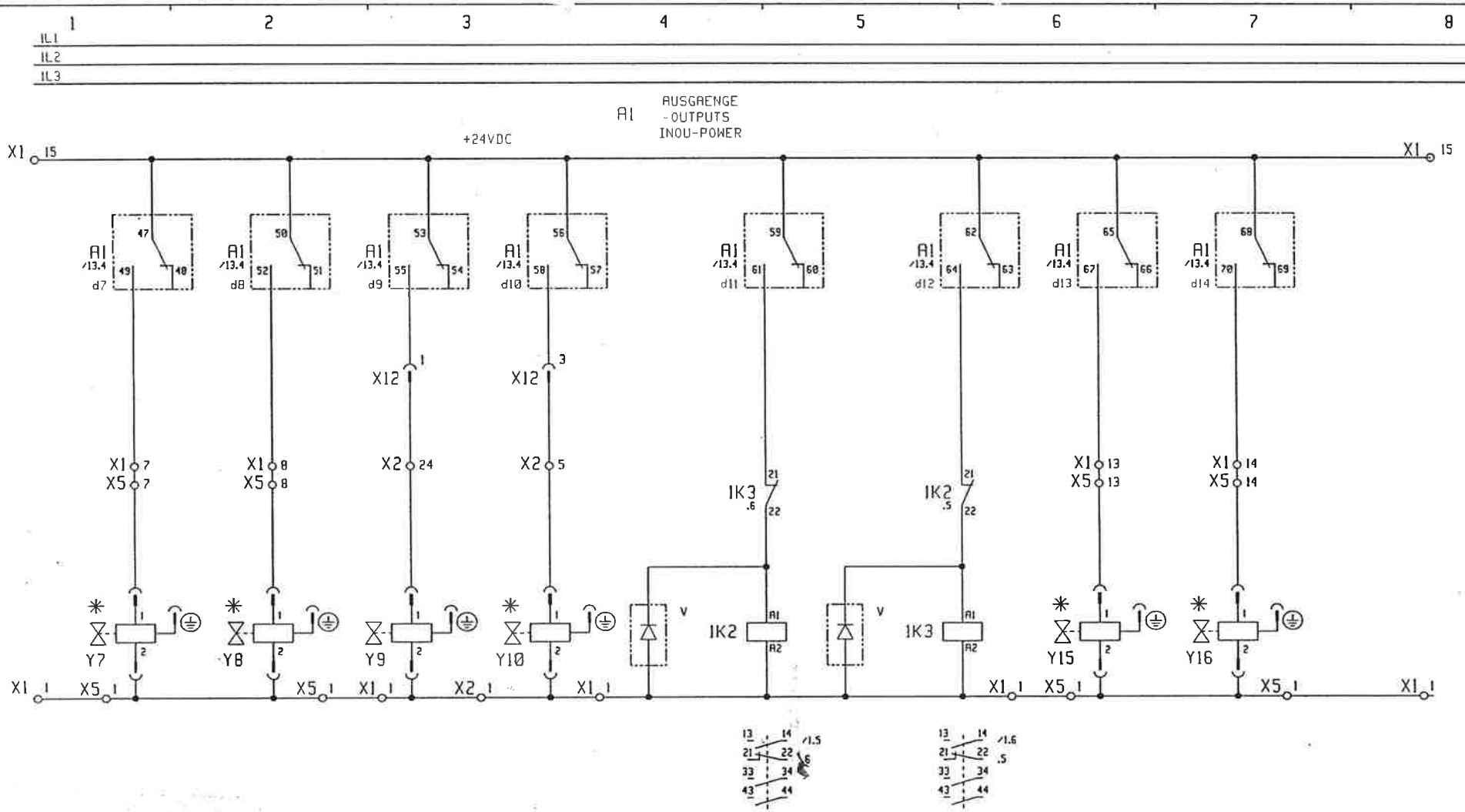

	Änderung	Datum	Name		Datum	Name
a						
b	A1 INOU-POWER NEU	28.09.94	KOO	gez.	07.10.94	KOO
c						
d				gedruckt	14.10.94	
e						

REINHARDT MASCHINENBAU GmbH
D-71065 SINDELFINGEN

Bez.	CIRCUIT DIAGRAM
Projektbez.	SWIVEL BENDING MACHINE RAS74.00
Zeichn.-Nr.:	S 74.00 / 9011UC
Ort:	
Auftrag:	208V 60HZ USA; 2-SPINDEL STOP; SIO
Anlage:	
Bl.:	3
von:	23

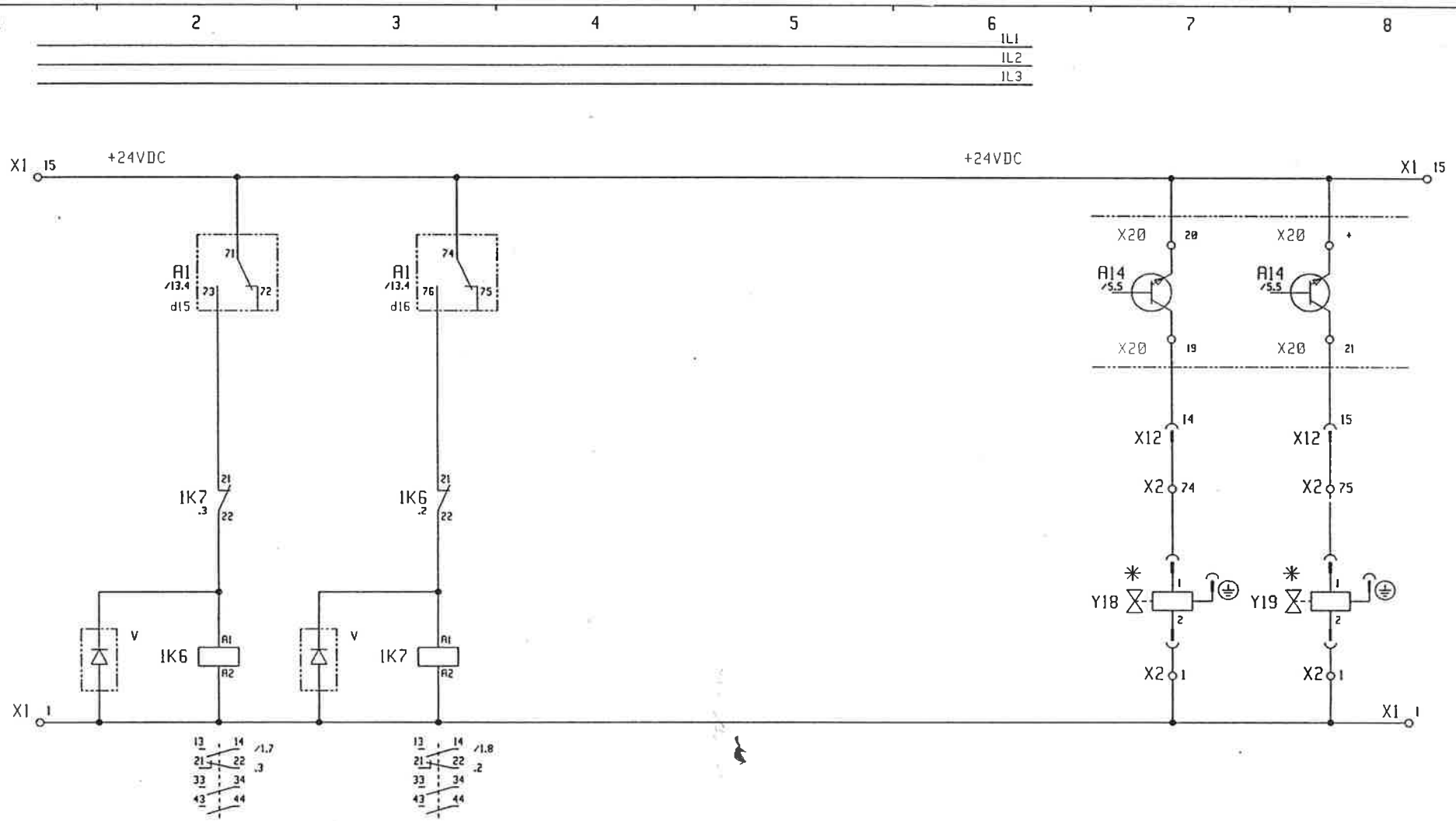

DOWN LOWER BEAM ADJUST UP

BACK STOP FLAPS

3000 3500

	Änderung	Datum	Name		Datum	Name
a						
b	A1 INDU-POWER NEU	28.09.94	K00	gez.	07.10.94	K00
c						
d				gedruckt	14.10.94	
e						

REINHARDT MASCHINENBAU GmbH
D-71065 SINDELFINGEN

Bez. CIRCUIT DIAGRAM	Zeichn.-Nr.: S 74.00 / 9011UC	Ort:	Anlage:
Projektbez. SWIVEL BENDING MACHINE RAS74.00	Auftrag: 208V 60HZ USA; 2-SPINDEL STOP; SIO	Bl.: 4	von: 23

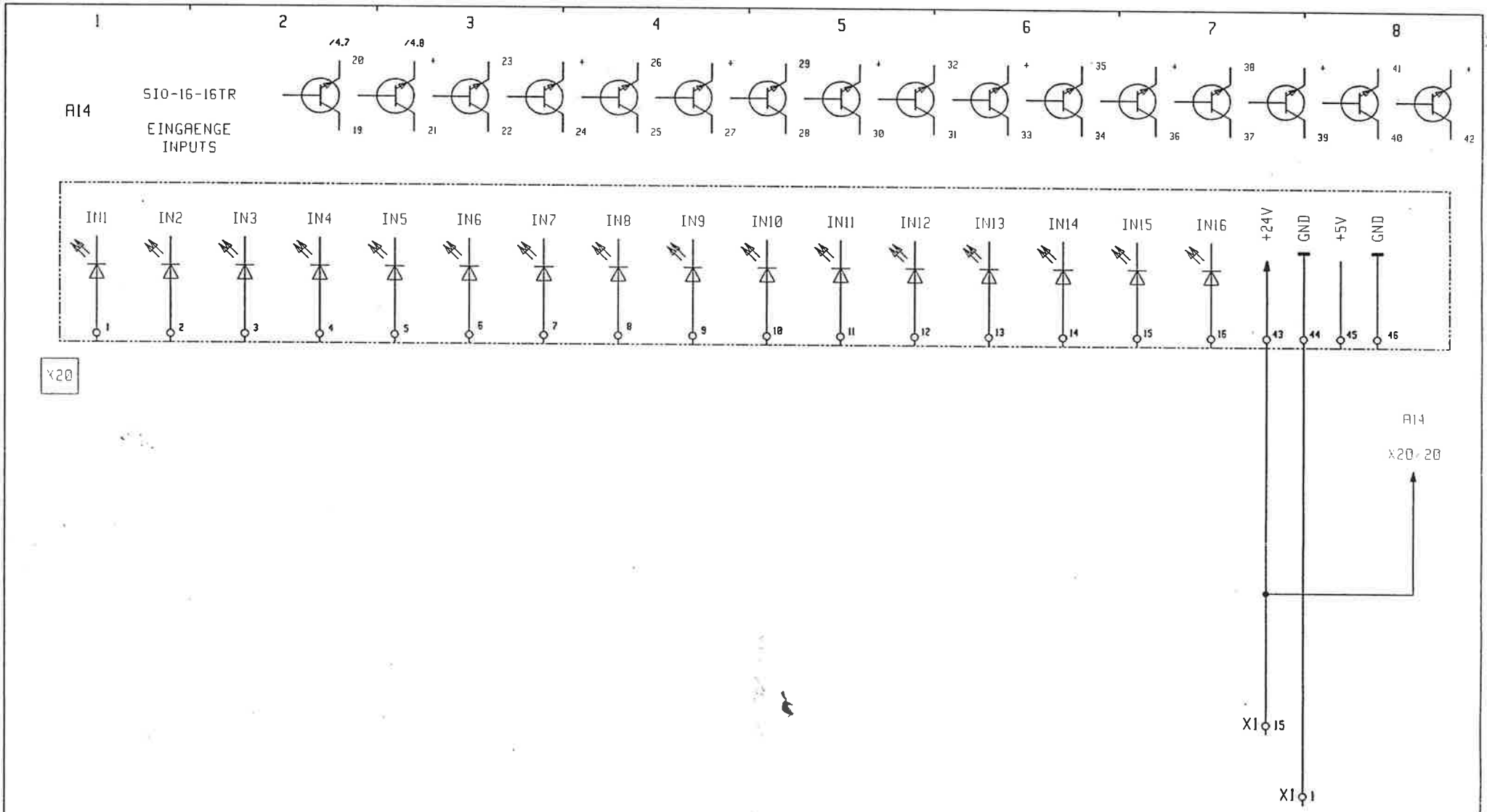

a	Anderung	Datum	Name		Datum	Name	REINHARDT MASCHINENBAU GmbH D-71065 SINDELFINGEN	Bez. CIRCUIT DIAGRAM	Zeichn.-Nr.: S 74.00 / 9011UC	Ort:	Anlage:
b				gez.	07.10.94	K00					
c											
d				gedruckt	14.10.94			Projektbez. SWIVEL BENDING MACHINE RAS74.00	Auftrag: 208V 60HZ USA; 2-SPINDEL STOP; SIO		Bl.: 5 von: 23
e											

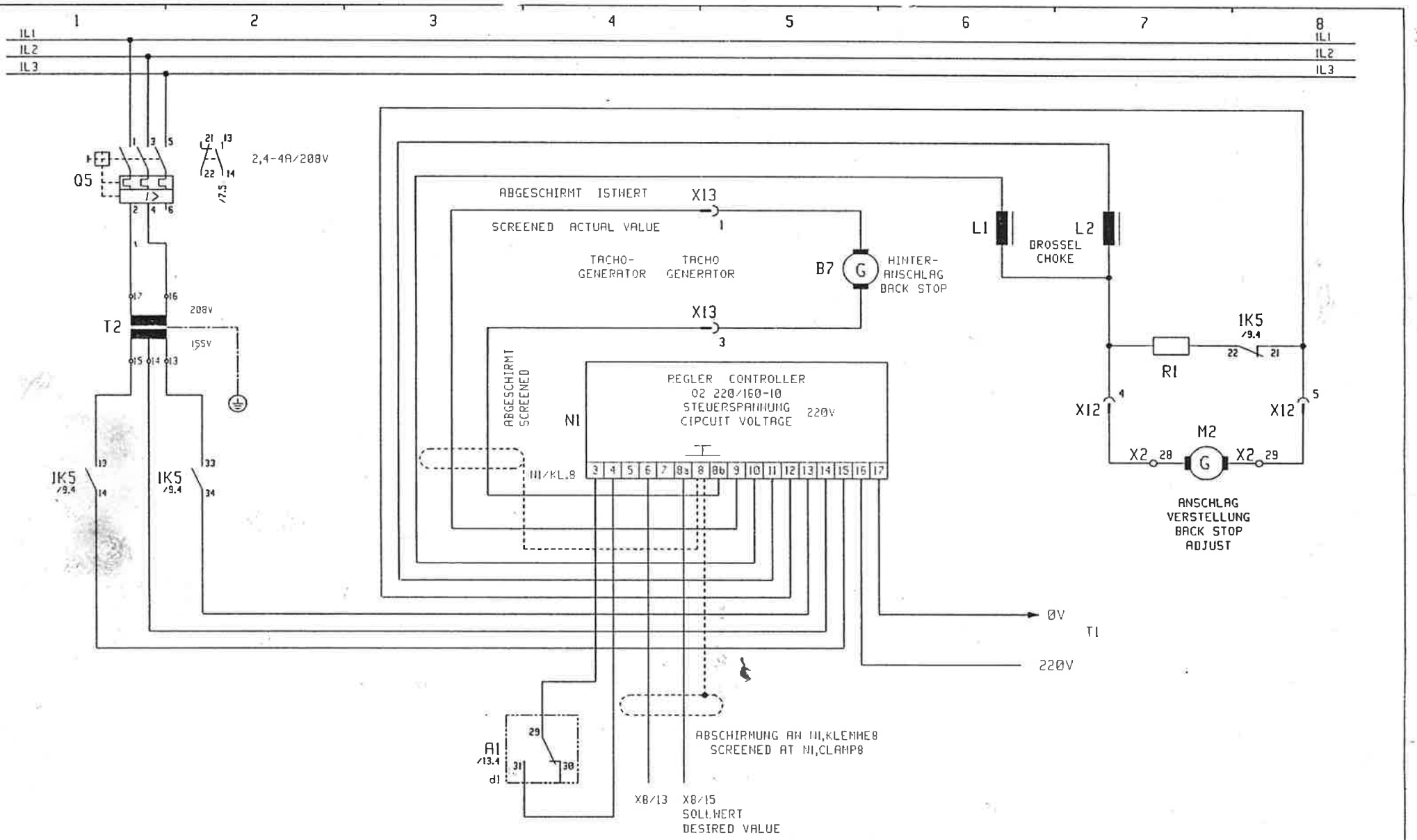

	Änderung	Datum	Name		Datum	Name
a						
b	A1	28.09.94	K00	gez.	07.10.94	K00
c						
d				gedruckt	14.10.94	
e						

REINHARDT MASCHINENBAU GmbH
D-71065 SINDELFINGEN

Bez.: CIRCUIT DIAGRAM	Zeichn.-Nr.: S 74.00 / 9011UC	Ort:	Anlage:
Projektbez.: SWIVEL BENDING MACHINE RAS74.00	Auftrag: 208V 60HZ USA; 2-SPINDEL STOP; SIO	Bl.: 6	von: 23

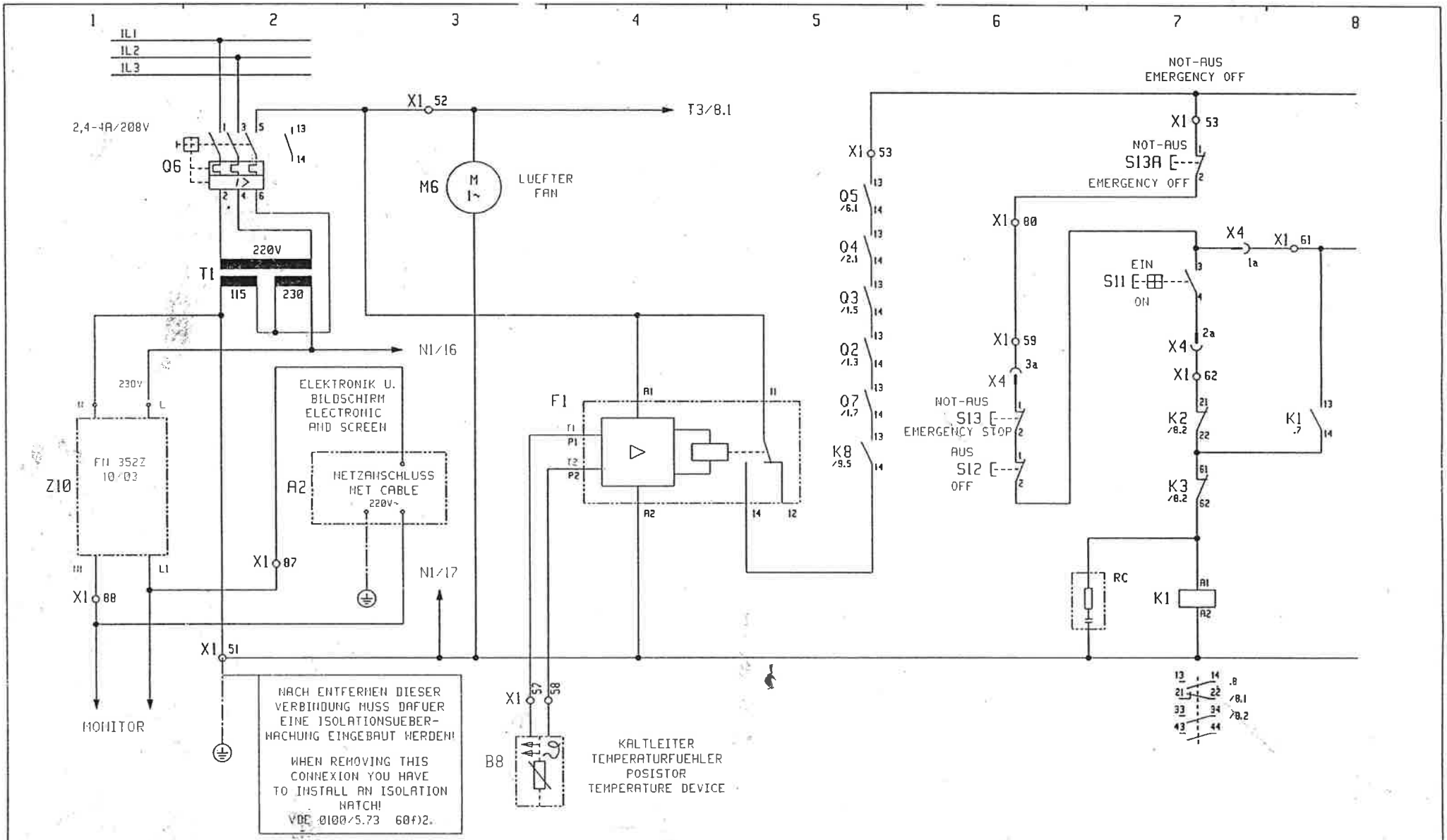

a	Aenderung	Datum	Name		Datum	Name
b				gez.	07.10.94	K00
c						
d				gedruckt	18.10.94	
e						

REINHARDT MASCHINENBAU GmbH
D-71065 SINDELFINGEN

Bez. CIRCUIT DIAGRAM	Zeichn.-Nr.: S 74.00 / 9011UC	Ort:	Anlage:
Projektbez. SWIVEL BENDING MACHINE RAS74.00	Auftrag: 208V 60HZ USA; 2-SPINDEL STOP; SIO		Bl.: 7 von: 23

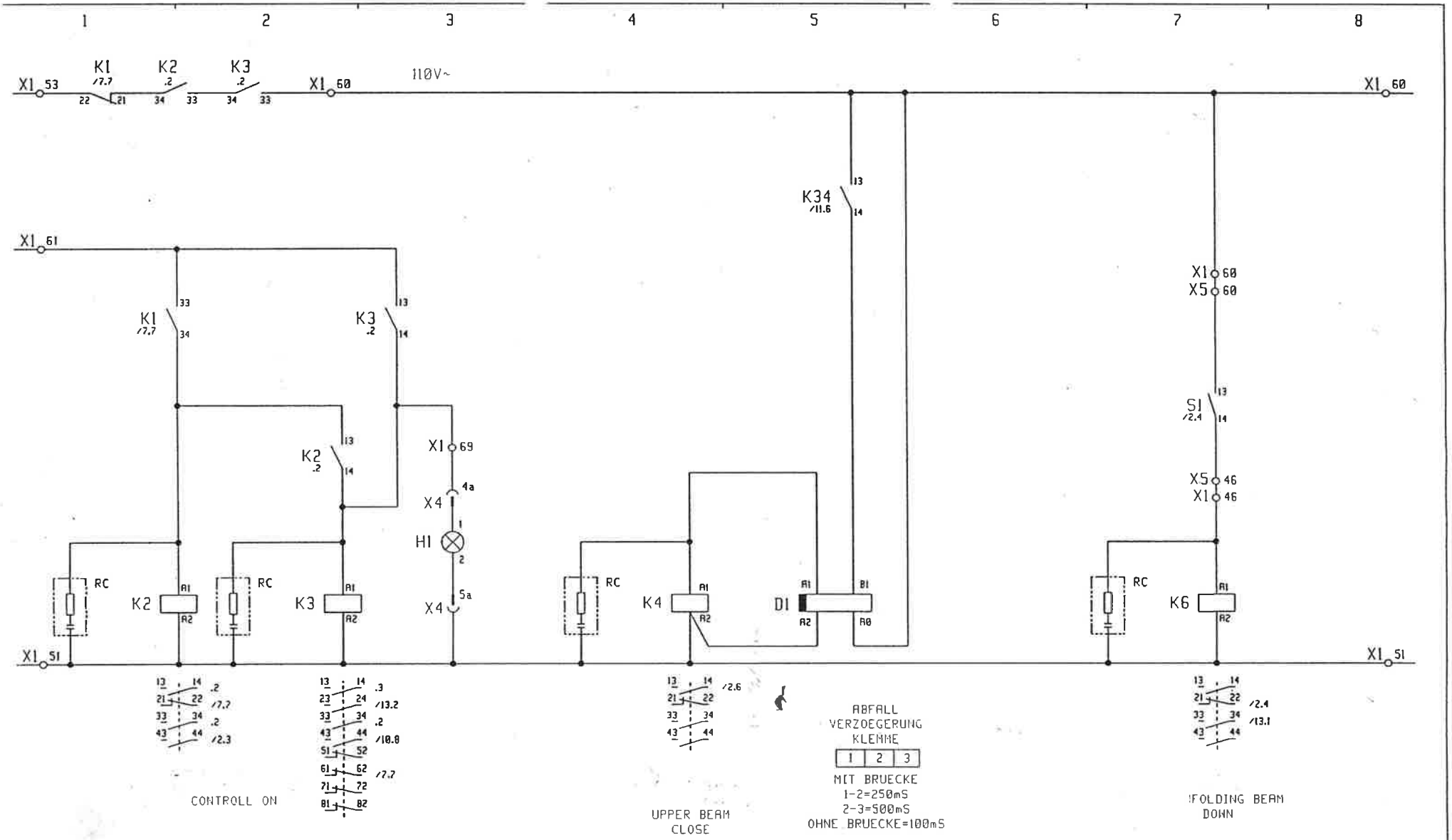

a	Aenderung	Datum	Name		Datum	Name
b				gez.	07.10.94	KOO
c						
d				gedruckt	14.10.94	
e						

REINHARDT MASCHINENBAU GmbH
D-71065 SINDELFINGEN

Bez.	Zeichn.-Nr.:	Ort:	Anlage:
CIRCUIT DIAGRAM	S 74.00 / 9011UC		
Projektbez.	Auftrag:		Bl.: 8
SWIVEL BENDING MACHINE RAS74.00	208V 60HZ USA; 2-SPINDEL STOP; SIO		von: 23

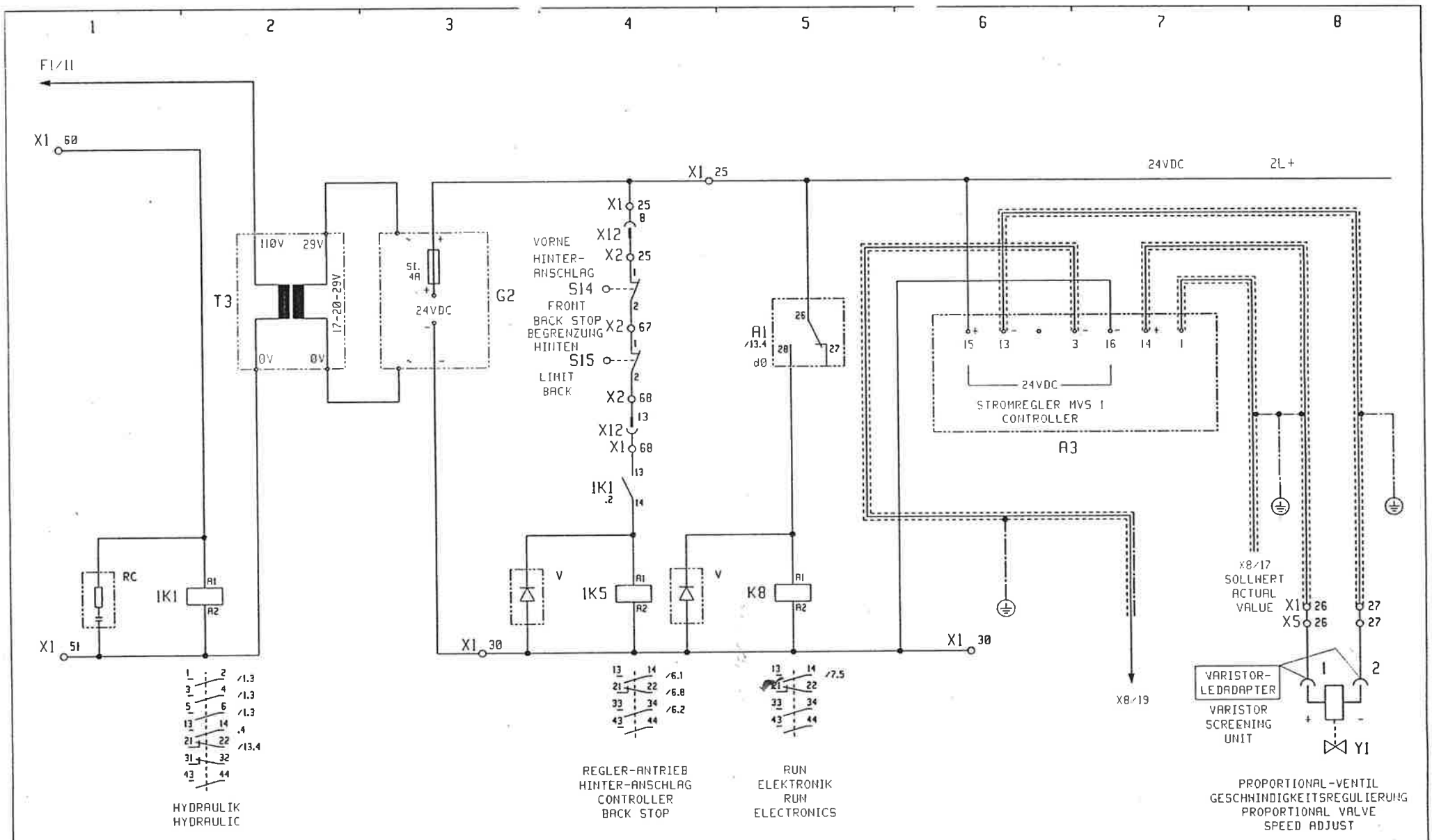

	Änderung	Datum	Name		Datum	Name
a						
b	AI RUN RELAIS	28.09.94	K00	gez.	07.10.94	K00
c						
d				gedruckt	14.10.94	
e						

REINHARDT MASCHINENBAU GmbH
D-71065 SINDELFINGEN

Bez.	CIRCUIT DIAGRAM	Zeichn.-Nr.: S 74.00 / 9011UC	Ort:
Projektbez.	SWIVEL BENDING MACHINE RAS74.00	Auftrag: 208V 60HZ USA; 2-SPINDEL STOP; SIO	Anlage: Bl.: 9 von: 23

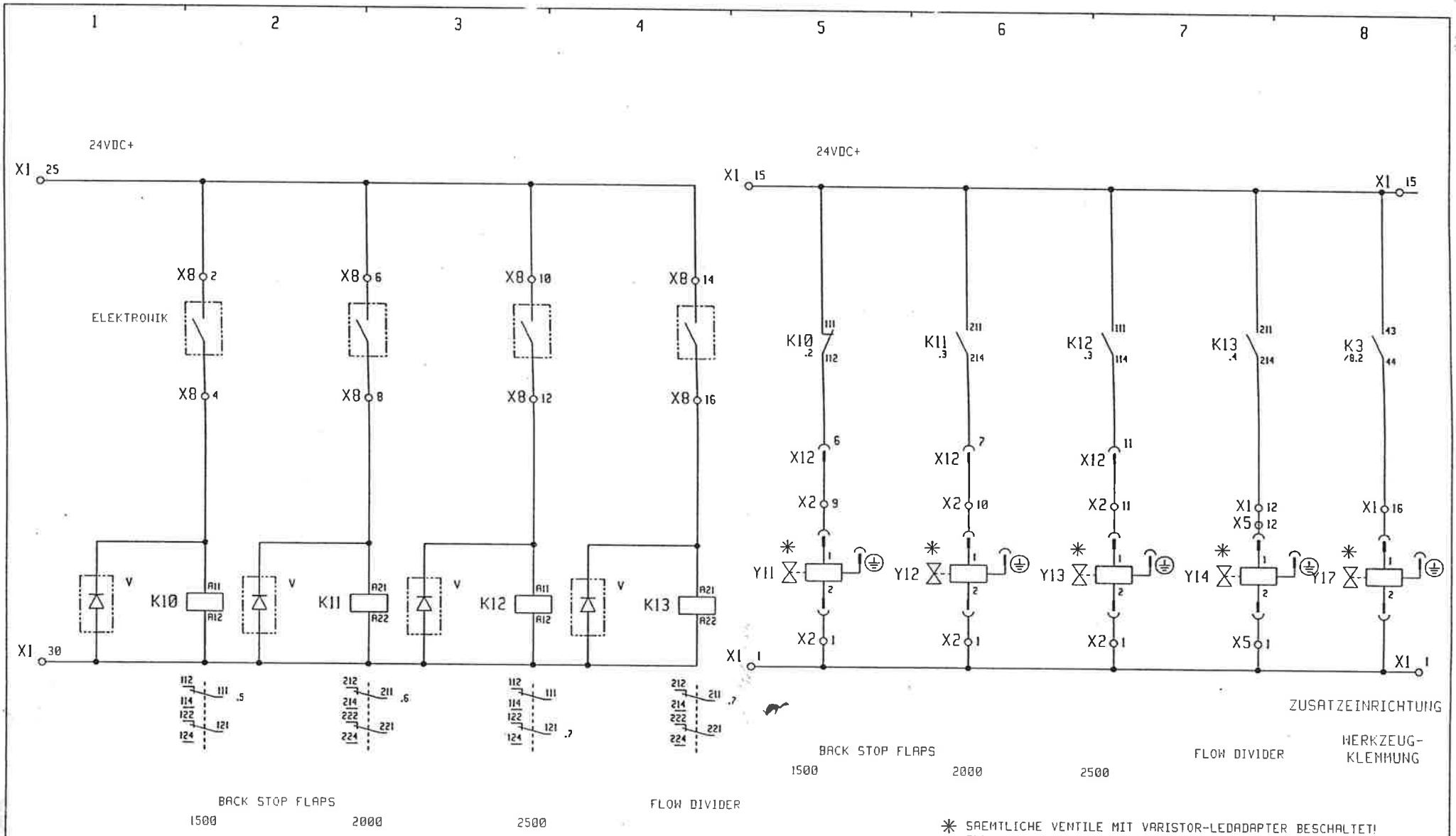

a	Änderung	Datum	Name		Datum	Name	REINHARDT MASCHINENBAU GmbH D-71065 SINDELFINGEN	Bez. CIRCUIT DIAGRAM	Zeichn.-Nr.: S 74.00 / 9011UC	Ort:	Anlage:
b				gez.	07.10.94	K00					
c											
d				gedruckt	14.10.94			Projektbez. SWIVEL BENDING MACHINE RAS74.00	Auftrag: 208V 60HZ USA; 2-SPINDEL STOP; SIO		Bl.: 10 von: 23
e											

1 2 3 4 5 6 7 8

OBERWANGE HALT BEI"SCHLIESSEN" 25mm

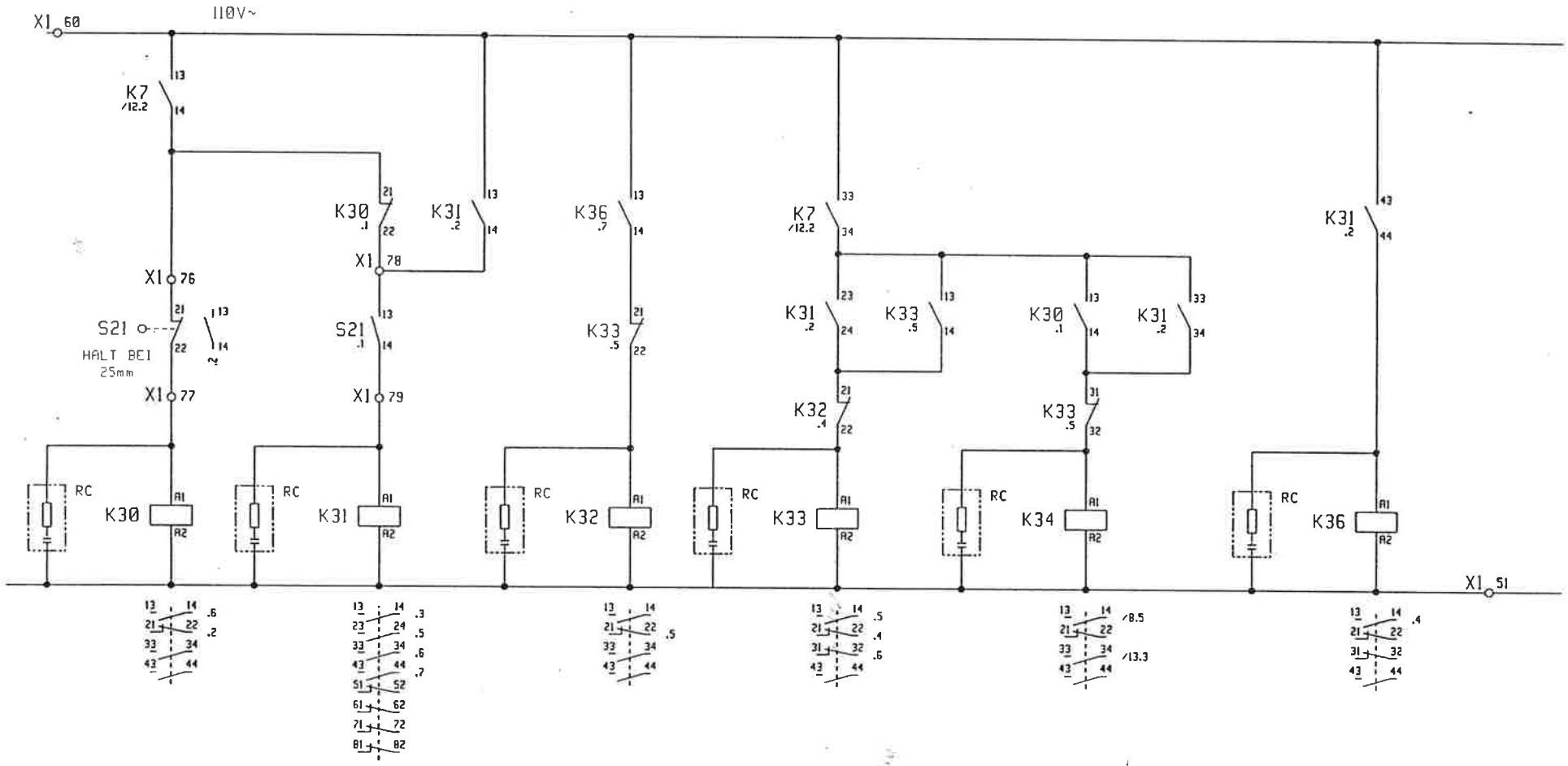

	Änderung	Datum	Name		Datum	Name
a						
b				gez.	07.10.94	K00
c						
d				gedruckt	14.10.94	
e						

REINHARDT MASCHINENBAU GmbH
D-71065 SINDELFINGEN

Bez. CIRCUIT DIAGRAM	Zeichn.-Nr.: S 74.00 / 9011UC	Ort:	Anlage:
Projektbez. SWIVEL BENDING MACHINE RAS74.00	Auftrag: 208V 60HZ USA; 2-SPINDEL STOP; SIO		Bl.: 11 von: 23

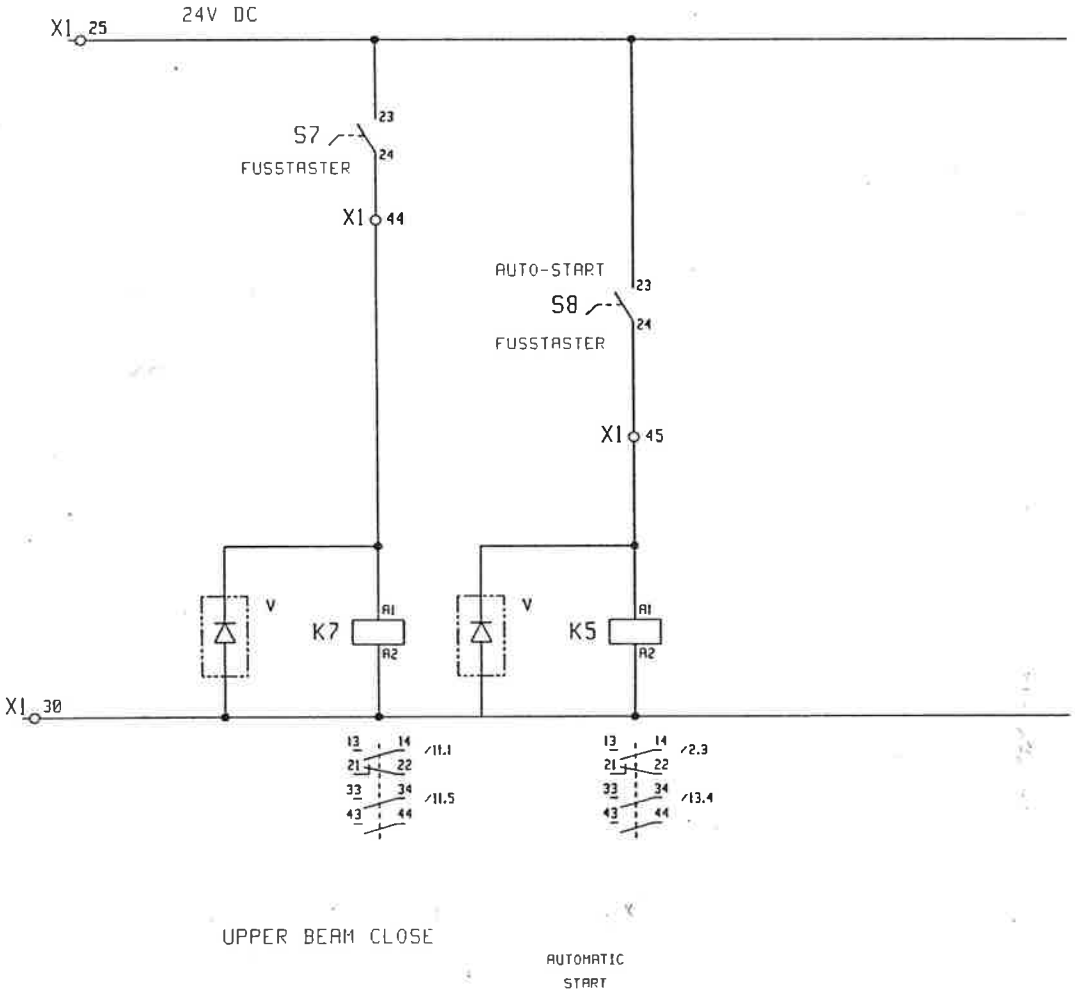

UPPER BEAM CLOSE

AUTOMATIC START

ANSCHLUSS GEBER

SIEHE BLATT 21

B1 G

ANSCHLAG

B2 G

BIEGEWANGE

B3 G

OBERWANGE LINKS

B4 G

OBERWANGE RECHTS

	Änderung	Datum	Name		Datum	Name
a				gez.	07.10.94	KOO
b						
c						
d				gedruckt	14.10.94	
e						

REINHARDT MASCHINENBAU GmbH
D-71065 SINDELFINGEN

Bez. CIRCUIT DIAGRAM	Zeichn.-Nr.: S 74.00 / 9011UC	Ort:	Anlage:
Projektbez. SWIVEL BENDING MACHINE RAS74.00	Auftrag: 208V 60HZ USA; 2-SPINDEL STOP; SIO		Bl.: 12 von: 23

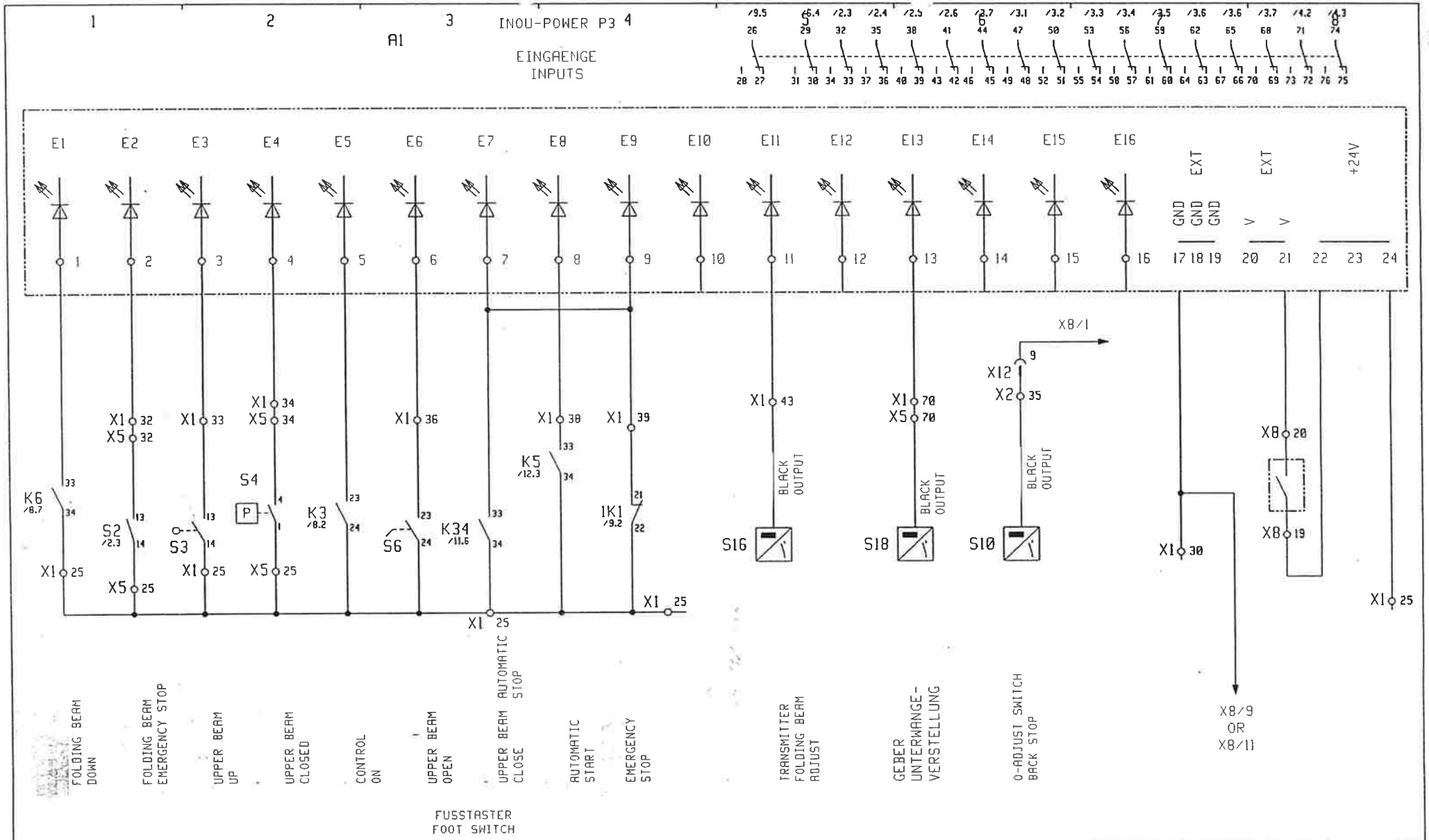

	Aenderung	Datum	Name		Datum	Name
a						
b	A1 INOU-POWER NEU	28.09.94	K00	gez.	07.10.94	K00
c						
d				gedruckt	10.10.94	
e						

REINHARDT MASCHINENBAU GmbH
D-71065 SINDELFINGEN

Bez. CIRCUIT DIAGRAM	Zeichn.-Nr.: S 74.00 / 9011UC	Ort:	Anlage:
Projektbez. SWIVEL BENDING MACHINE RAS74.00	Auftrag: 208V 60HZ USA; 2-SPINDEL STOP; SIO		Bl.: 13 von: 23

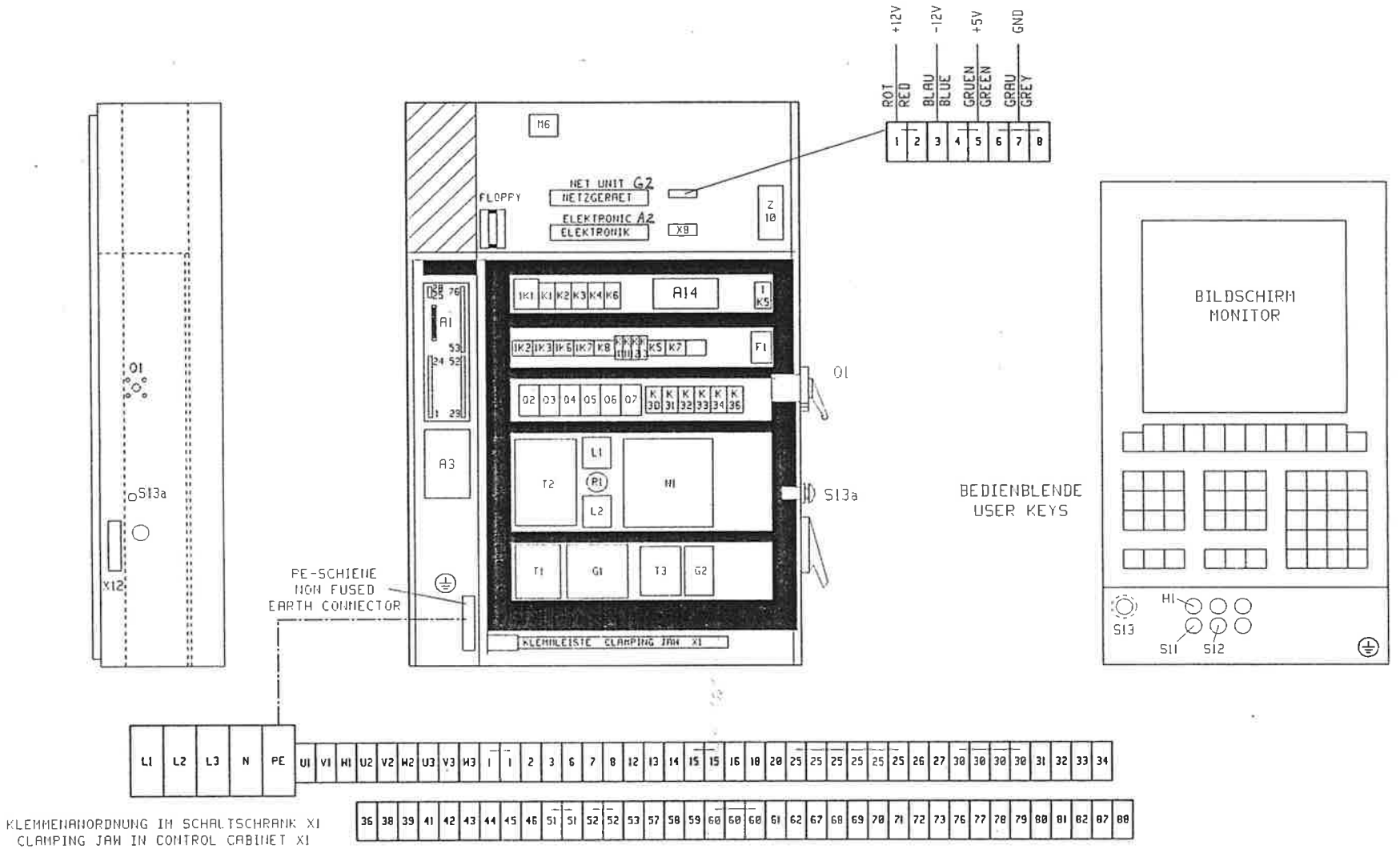

	Änderung	Datum	Name		Datum	Name
a						
b				gez.	07.10.94	K00
c						
d				gedruckt	14.10.94	
e						

REINHARDT MASCHINENBAU GmbH
D-71065 SINDELFINGEN

Bez.	CIRCUIT DIAGRAM	Zeichn.-Nr.: S 74.00 / 9011UC	Ort:
Projektbez.	SWIVEL BENDING MACHINE RAS74.00	Auftrag: 208V 60HZ USA; 2-SPINDEL STOP; SIO	Anlage: Bl.: 14 von: 23

1 2 3 4 5 6 7 8

CONNECTION PENDANT CONTROL STATION

CONTROL ON S11 | EMERGENCY OFF S12 OFF | S13 | CONTROL H1

110V

X1 X2

PLUG X4 2a 1a 3a 4a 5a

PLUG X9 2a 1a 3a 4a 5a

X1/62 61 59 69 51

KABEL 18x0,5qmm

ELEKTRONIK
ANSCHLUSS NETZTEIL
ELEKTRONICS
CONNECTION NET UNIT

GRUEN GREEN | ROT RED | BLAU BLUE | GRAU GREY

5V +12V -12V GND

MONITOR 220V

KEY BOARD

GRAU GREY | GREEN | RED

1b 2b 3b 4b 5b

1b 2b 3b 4b 5b

87 88

220V~

POWER INC 3201

NR. 1 ~220V 2 3

NR. 4 +12V | 5 GND | 6 -12V | 7 GND | 8 +5V | 9 GND | 10 | 11

	Änderung	Datum	Name		Datum	Name
a						
b						
c				gez.	07.10.94	KOO
d						
e				gedruckt	14.10.94	

REINHARDT MASCHINENBAU GmbH
D-71065 SINDELFINGEN

Bez. CONNECTION DIAGRAM	Zeichn.-Nr.: S 74.00 / 9011UC	Ort:	Anlage:
Projektbez. SWIVEL BENDING MACHINE RAS74.00	Auftrag: 208V 60HZ USA; 2-SPINDEL STOP; SIO		Bl.: 15 von: 23

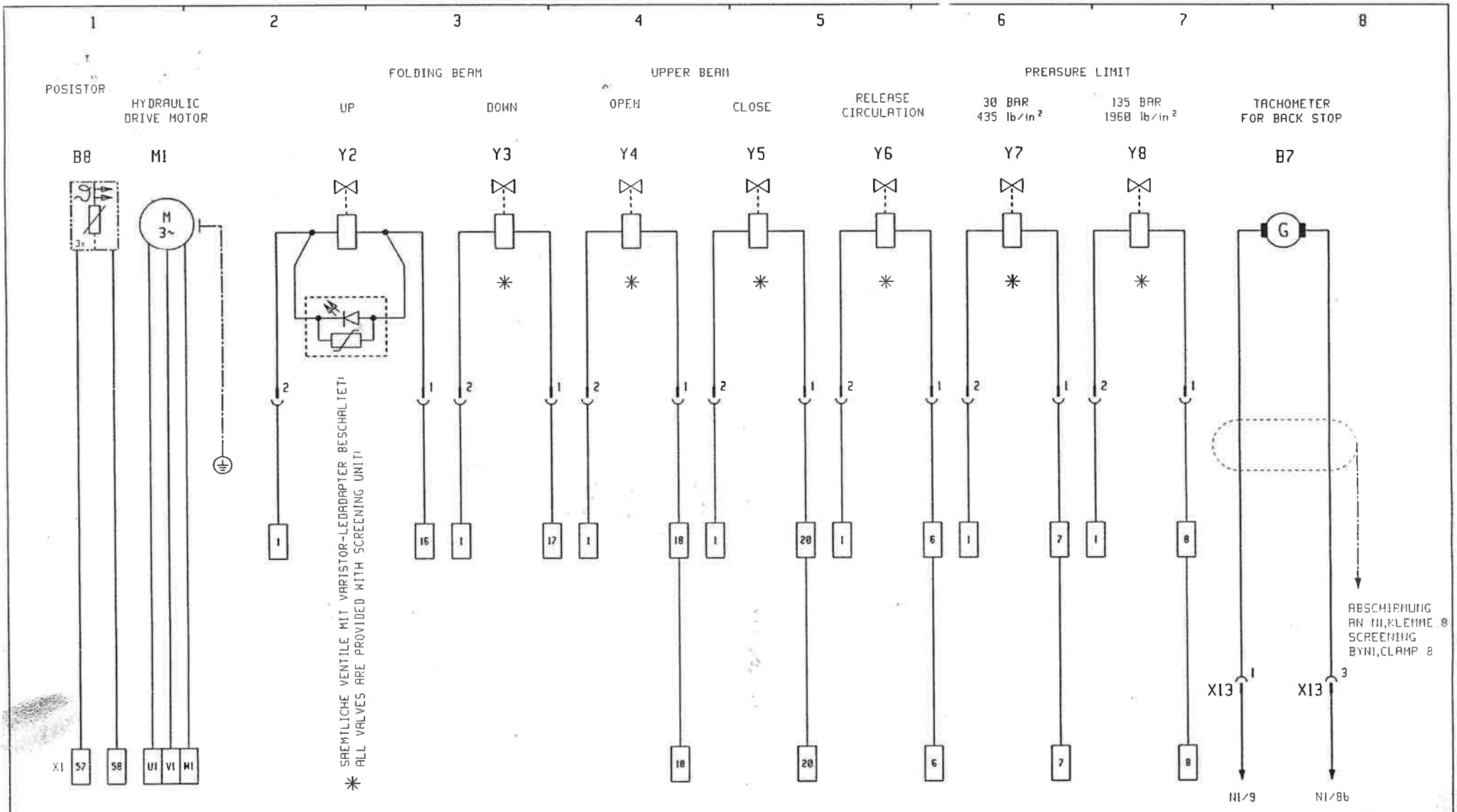

	Änderung	Datum	Name		Datum	Name
a						
b				gez.	07.10.94	K00
c						
d				gedruckt	14.10.94	
e						

REINHARDT MASCHINENBAU GmbH
D-71065 SINDELFINGEN

Bez. CONNECTION DIAGRAM	Zeichn.-Nr.: S 74.00 / 9011UC	Ort:	Anlage:
Projektbez. SWIVEL BENDING MACHINE RAS74.00	Auftrag: 208V 60HZ USA; 2-SPINDEL STOP; SIO		Bl.: 16 von: 23

1 2 3 4 5 6 7 8

MENGEN-
TEILER
FLOW
DIVIDER

Y14

BIEGEWANGEVERSTELLUNG
FOLDING BEAMADJUST

220V

M3

GEBER
TRANSMITTER

S16

OBERWANGE
HALT BEI 8MM
SCHLIESSEN

S21

UNTERWANGEN-
VERSTELLUNG
LOWER BEAM
ADJUST

M5

UNTERWANGENVERSTELLUNG
GEBER
LOWER BEAM ADJUST
TRANSMITTER

S18

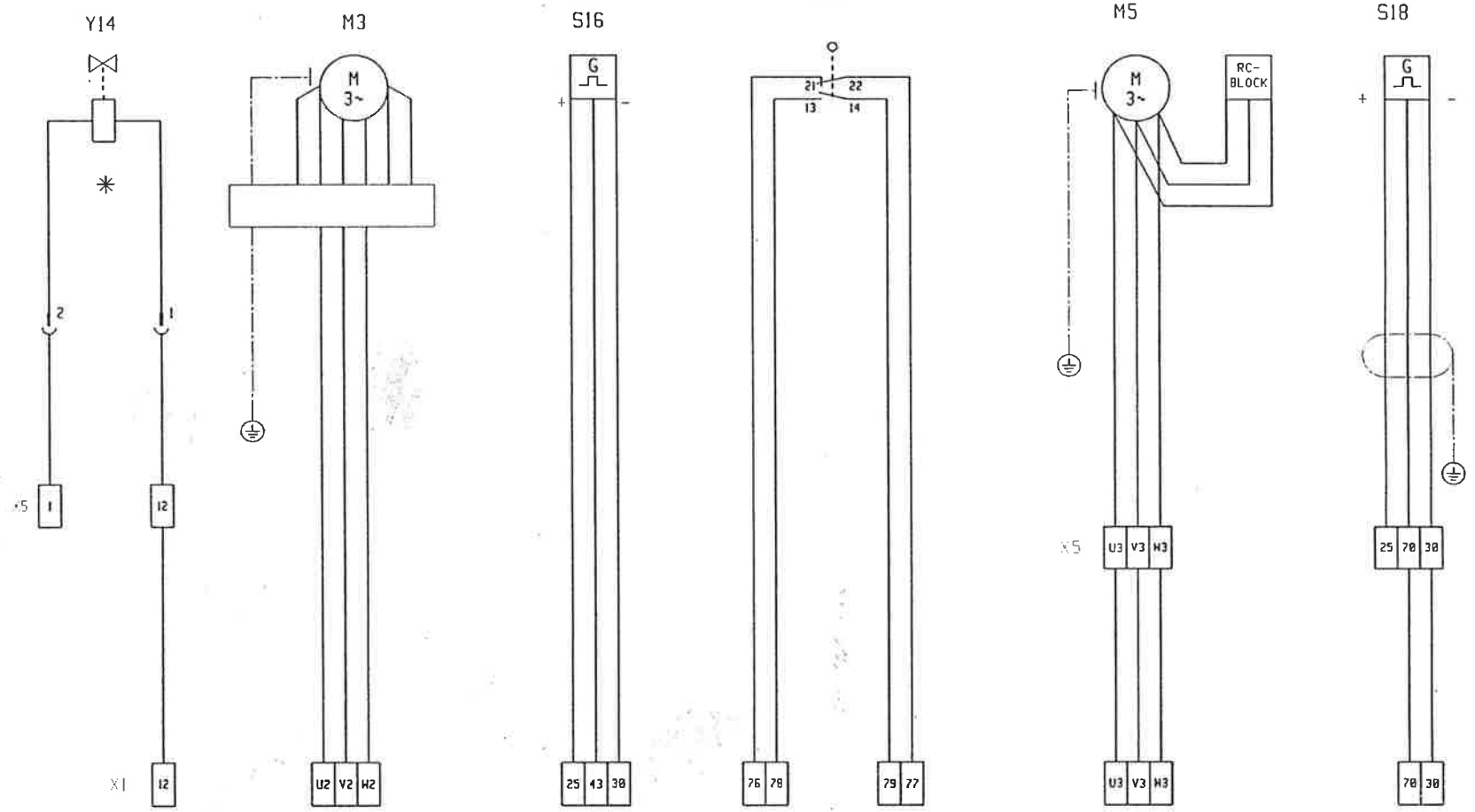

	Änderung	Datum	Name		Datum	Name
a						
b				gez.	07.10.94	K00
c						
d				gedruckt	14.10.94	
e						

REINHARDT MASCHINENBAU
GmbH
D-71065 SINDELFINGEN

Bez. CONNECTION DIAGRAM	Zeichn.-Nr.: S 74.00 / 9011UC	Ort:	Anlage:
Projektbez. SWIVEL BENDING MACHINE RAS74.00	Auftrag: 208V 60HZ USA; 2-SPINDEL STOP; SIO		Bl.: 17 von: 23

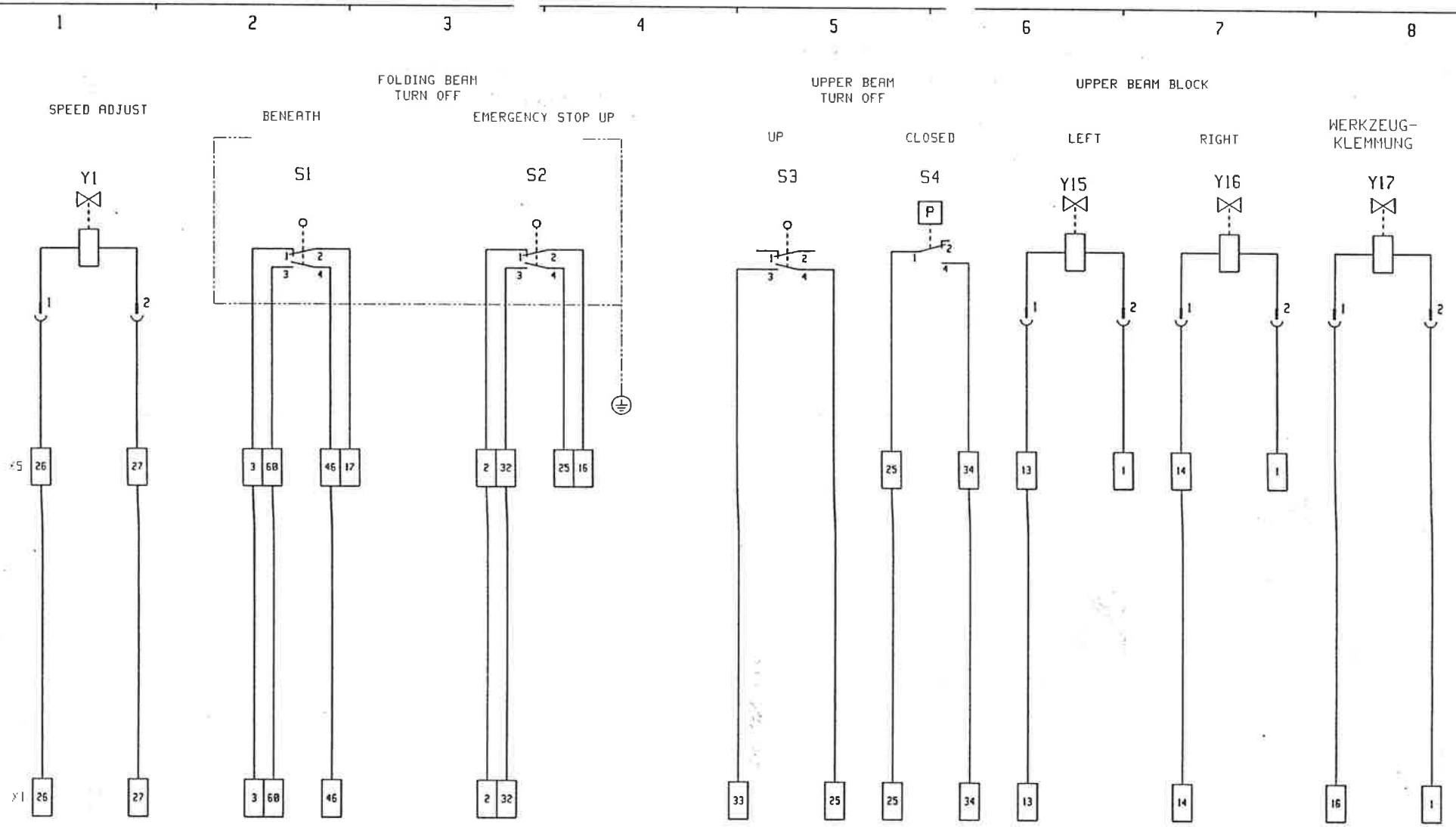

	Änderung	Datum	Name		Datum	Name
a						
b						
c				gez.	07.10.94	K00
d						
e				gedruckt	14.10.94	

REINHARDT MASCHINENBAU GmbH
D-71065 SINDELFINGEN

Bez. CONNECTION DIAGRAM	Zeichn.-Nr.: S 74.00 / 9011UC	Ort:	Anlage:
Projektbez. SWIVEL BENDING MACHINE RAS74.00	Auftrag: 208V 60HZ USA; 2-SPINDEL STOP; SIO		Bl.: 18 von: 23

1 2 3 4 5 6 7 8

FUSSTASTER

UPPER BEAM OPEN

AUTOMATIC START

AUTOMATIC STOP

S7 S6 S8

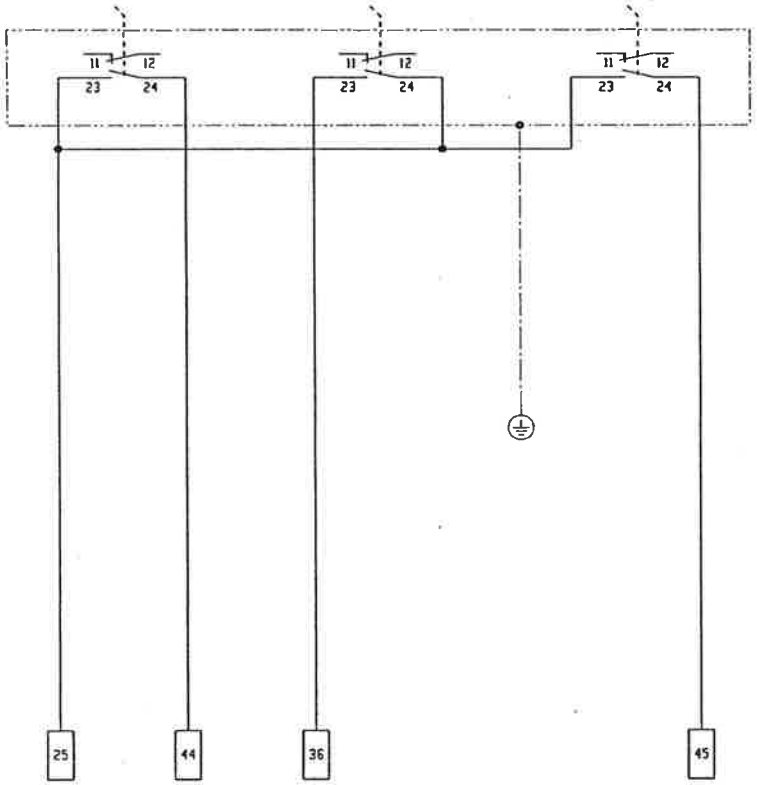

	Änderung	Datum	Name		Datum	Name
a						
b				gez.	07.10.94	K00
c						
d				gedruckt	14.10.94	
e						

REINHARDT MASCHINENBAU GmbH
D-71065 SINDELFINGEN

Bez. CONNECTION DIAGRAM	Zeichn.-Nr.: S 74.00 / 9011UC	Ort:	Anlage:
Projektbez. SWIVEL BENDING MACHINE RAS74.00	Auftrag: 200V 60HZ USA; 2-SPINDEL STOP; SIO		Bl.: 19 von: 23

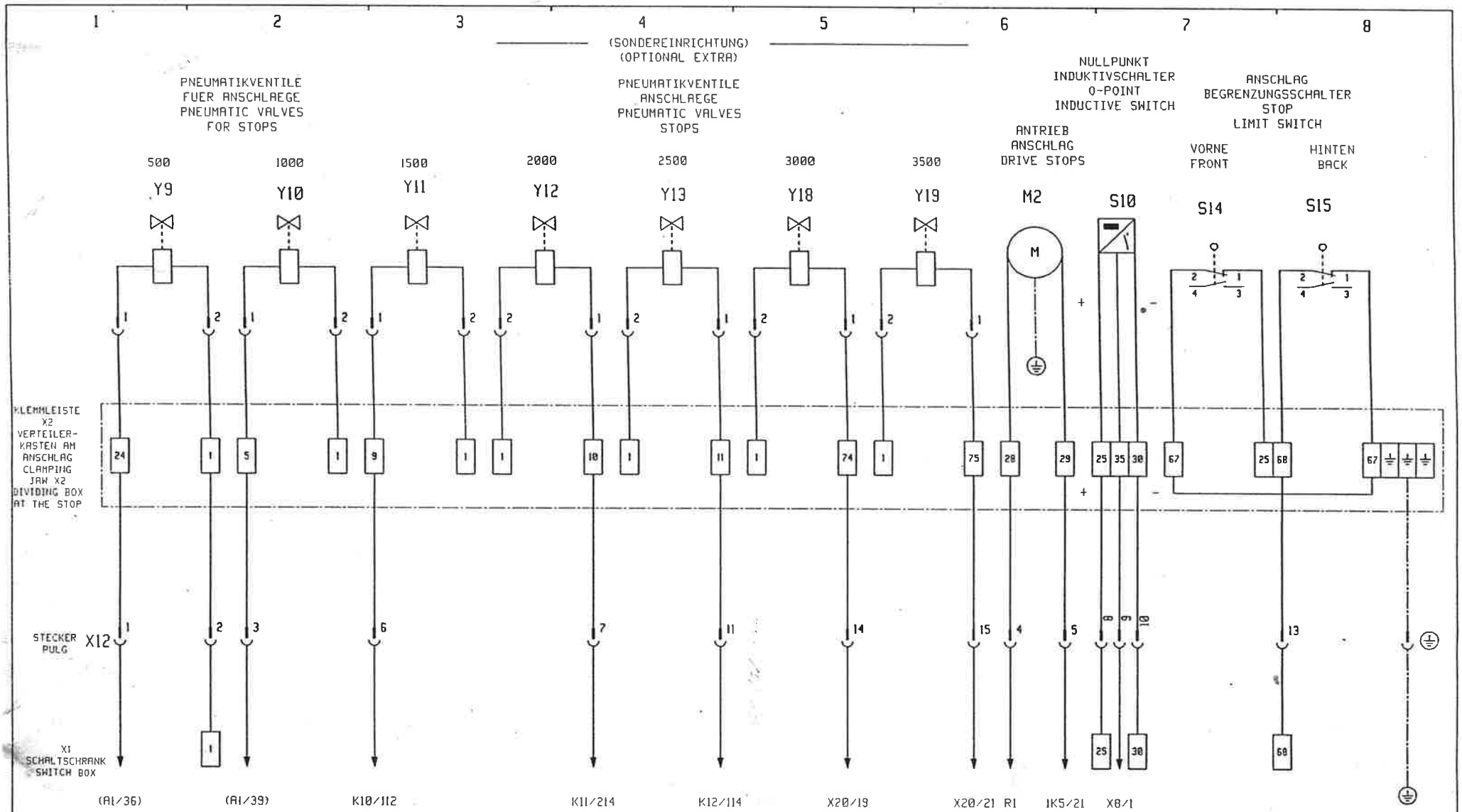

a	Änderung	Datum	Name		Datum	Name	REINHARDT MASCHINENBAU GmbH D-71065 SINDELFINGEN	Bez. CONNECTION DIAGRAM	Zeichn.-Nr.: S 74.00 / 9011UC	Ort:	Anlage:
b				gez.	07.10.94	K00					
c								Projektbez. SWIVEL BENDING MACHINE RAS74.00	Auftrag: 208V 60HZ USA; 2-SPINDEL STOP; SIO		Bl.: 20 von: 23
d				gedruckt	28.10.94						
e											

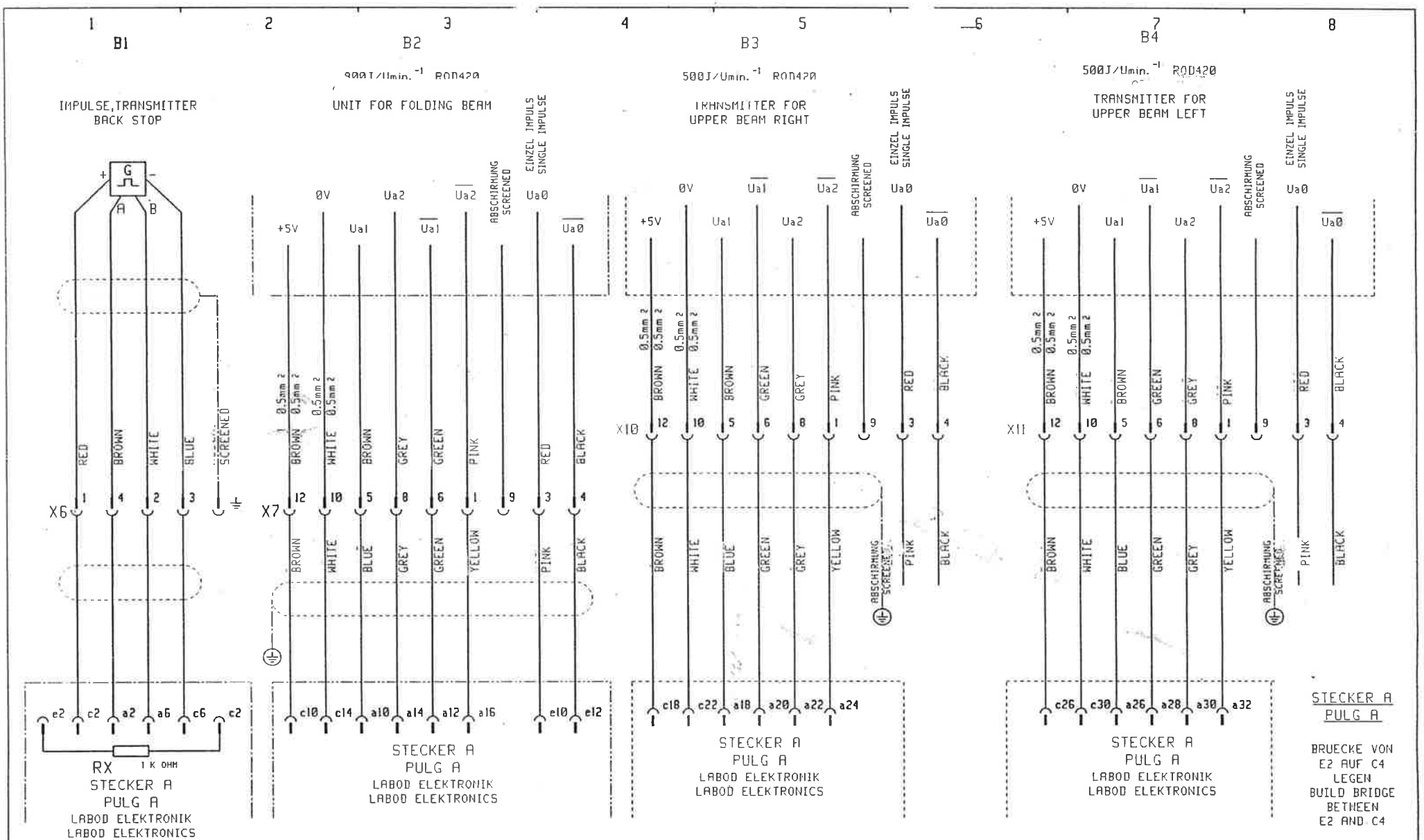

	Änderung	Datum	Name		Datum	Name
a						
b	RX	28.09.94	KOO	gez.	07.10.94	KOO
c						
d				gedruckt	14.10.94	
e						

REINHARDT MASCHINENBAU GmbH
D-71065 SINDELFINGEN

Bez.	CONNECTION DIAGRAM	Zeichn.-Nr.: S 74.00 / 9011UC	Ort:
Projektbez.	SWIVEL BENDING MACHINE RAS74.00	Auftrag: 208V 60HZ USA; 2-SPINDEL STOP; SIO	Anlage: Bl.: 21 von: 23

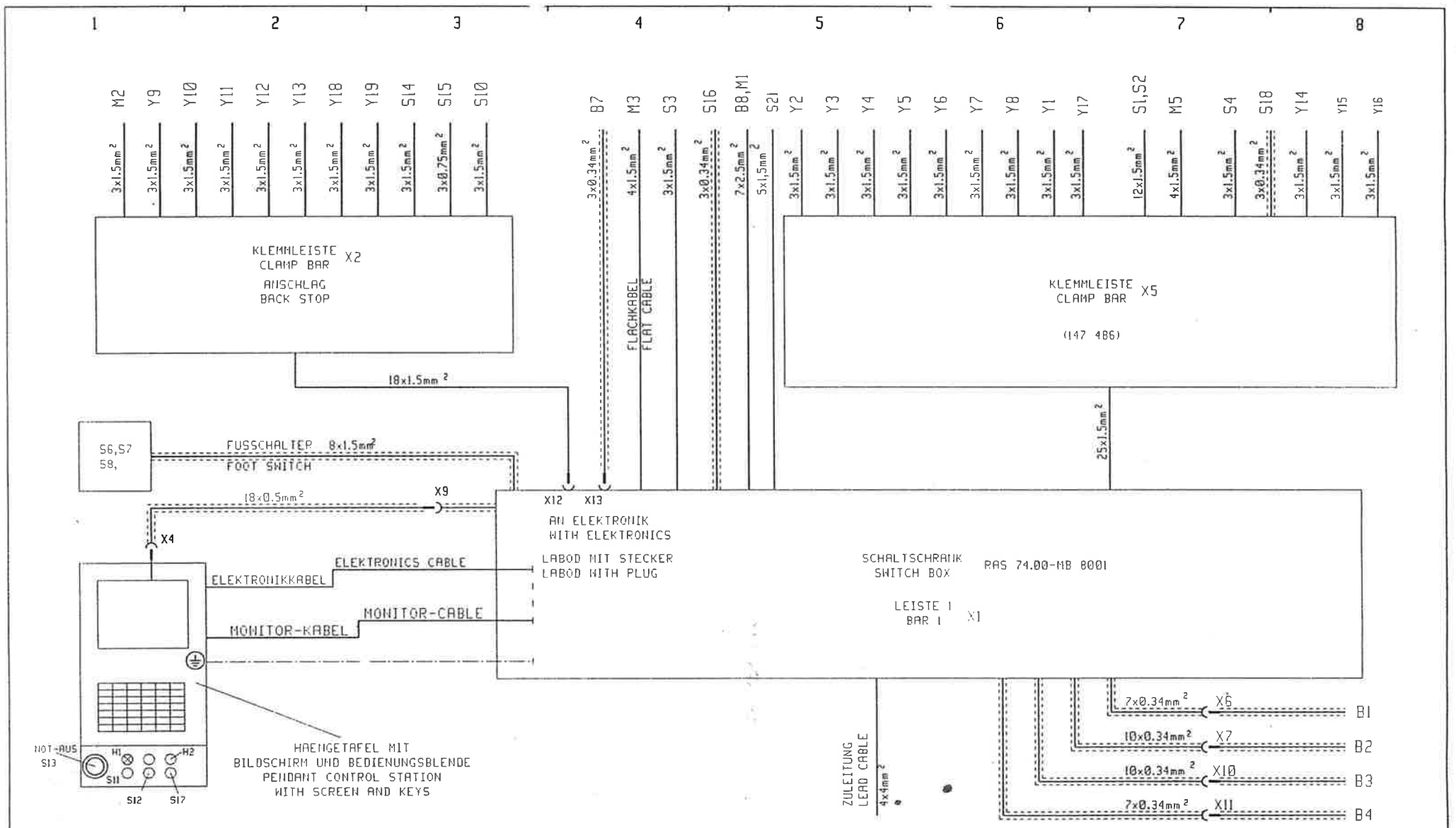

	Änderung	Datum	Name		Datum	Name
a						
b				gez.	07.10.94	K00
c						
d				gedruckt	14.10.94	
e						

REINHARDT MASCHINENBAU GmbH
D-71065 SINDELFINGEN

Bez.	Zeichn.-Nr.:	Ort:	Anlage:
INSTALLATION SCHEME	S 74.00 / 9011UC		
Projektbez.	Auftrag:		Bl.: 22 von: 23
SWIVEL BENDING MACHINE RAS74.00	208V 60HZ USA; 2-SPINDEL STOP; SIO		

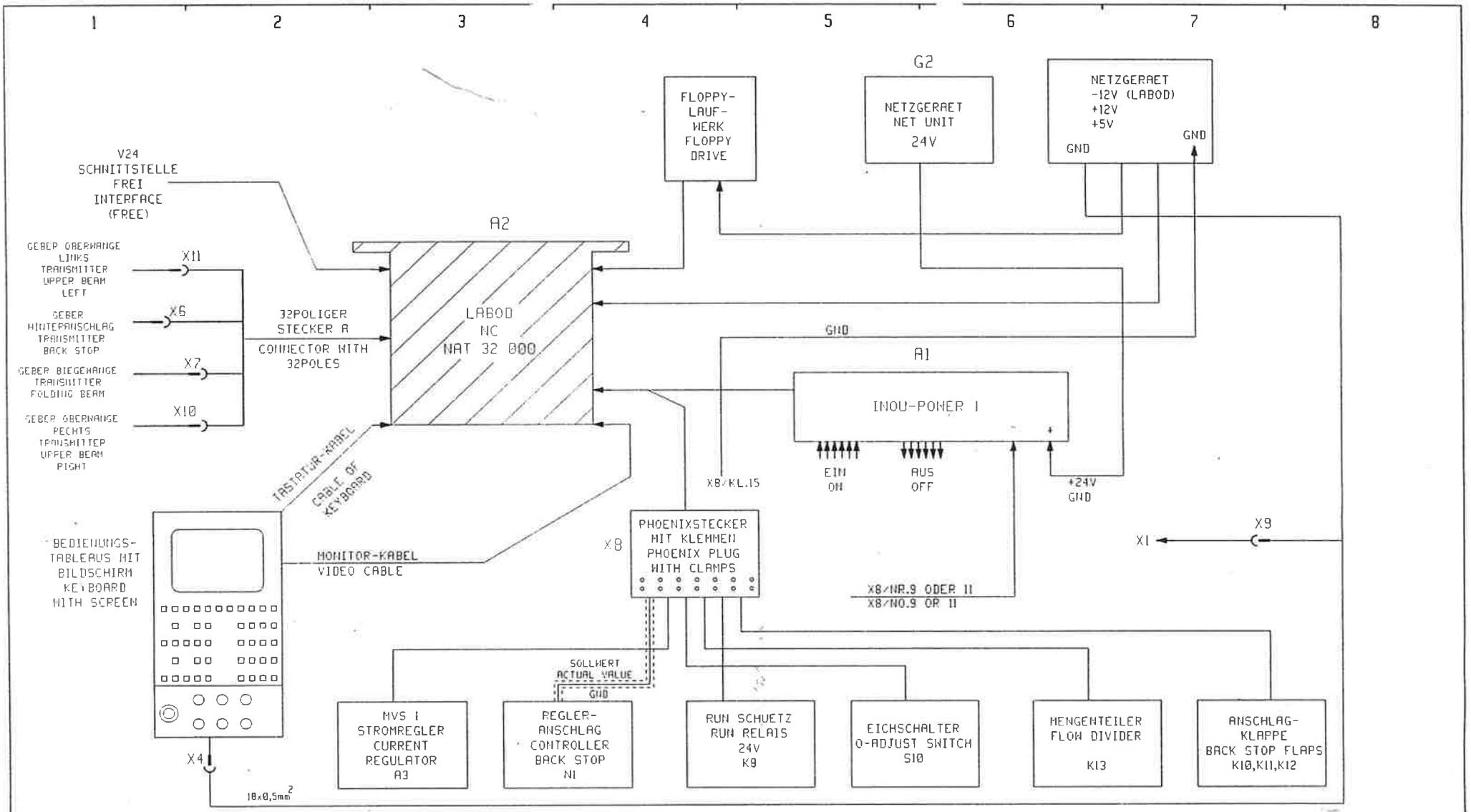

	Anderung	Datum	Name		Datum	Name
a						
b				gez.	07.10.94	K00
c						
d				gedruckt	14.10.94	
e						

REINHARDT MASCHINENBAU GmbH
D-71065 SINDELFINGEN

Bez.	INSTALLATION SCHEME	Zeichn.-Nr.: S 74.00 / 9011UC	Ort:
Projektbez.	SWIVEL BENDING MACHINE RAS74.00	Auftrag: 208V 60HZ USA; 2-SPINDEL STOP; SIO	Anlage: Bl.: 23 von: 23

* Projekt : RAS74-9011UC * Reinhardt Maschinenbau GmbH
* Proj.bez.: SWIVEL BENDING MACHINE RAS74.00 * Richard-Wagner-Str. 4-10
* Zeichnung: S 74.00 / 9011UC * D-71065 Sindelfingen
* Auftrag : 208V 60HZ USA; 2-SPINDEL STOP; S* Tel.:07031/863-0

BMK Ort Anlage Bl.Pfad	Sachnummer Hersteller	Benennung Technische Beschreibung
A1 + = 13.4	166274 LABOD	INOU-POWER P3 16/16 INPUT-OUTPUT PLATINE INOU P3 OE 16 EINGAENGE;16 RELAIS AUSGAENGE 1 RUN RELAIS ; 40 POL.FLACHSTECKER KLEMMENANSCHLUESSE
A3 + = 9.6	131141 UNITEK	STROMREGLER MVS1 FUER PROPORTIONAL-MAGNETE BIS MAX. 1,2A SOLLWERT 0-10V ANSCHLUSS-SPANNUNG 28V
A14 + = 5.5	164535 LABOD	SIO-KARTE EIN-UND AUSGANGSPLATINE; HALBLEITERAUSGAENGE 24V DC; TYP SIO 2; 1m KABEL UND STECKER;
B1 + = 12.7	114138 GELMA MBB	IMPULSGEBER TYP:LG 412-250/28/102;250 IMPULSE ABSCHIRMUNG NICHT AM GEHAEUSE ERDEN
B2 + = 12.7	131489 HEIDENHAIN	IMPULSGEBER ROD 420D IMPULSGEBER ROD 420D-00900 RV KV01,00; 5VDC ; 900 IMPULSE PRO UMDREHUNG MIT REFERENZIMPULS; 1m KABEL OHNE STECKER;
B3 + = 12.7	127230 HEIDENHAIN	DREHGEBER ROD 420 IMPULSGEBER ROD 420; 5VDC ; 500 IMPULSE PRO UMDREHUNG; 1m KABEL;
B4 + = 12.7	127230 HEIDENHAIN	DREHGEBER ROD 420 IMPULSGEBER ROD 420; 5VDC ; 500 IMPULSE PRO UMDREHUNG; 1m KABEL;
D1 + = 8.5	92424 WOEHRLE	RELAIS RUECKFALLVERZOEGERTES RELAIS 110/250 MILLISEK. EU-RZM /110; 110V AC;60HZ;

Fortsetzung auf Seite 2

BMK Ort Anlage Bl.Pfad	Sachnummer Hersteller	Benennung Technische Beschreibung
F1 + = 7.4	92423 KLOECKN.MOELLER	AUSLOESEGERAET EMT5 FORM CDN;115V,50/60HZ THERMISTOR-MASCHINENSCHUTZGERAET FUER KALTLEITER-TEMPERATURFUEHLER(PTC)
G1 + = 2.1	121918 FREI GEBR.GMBH&	NETZGER.SOND.24V 8A FEGSE 145-36.1-01,24V,8A,EINPHASEN;440...600V SILIZIUMGLEICHRICHTER,BRUECKENSCHALTUNG VARISTOR GEGEN SPANNUNGSSPITZEN RESTWELLIGKEIT KLEINER 5%,KURZSCHLUSSCHUTZ
G2 + = 9.3	92245 WOEHRLE	NETZGER+TRAFO NGS 242403.8;STABILISIERT;8-24V EINSTELLBAR TRAFO TO-240VA-03 PRIMAER:110/127/220V SEKUNDAER:17/20/29V
H1 + = 8.3	158696 RAFI	BLENDENNIPPEL FARBL. BLENDENNIPPEL FARBLOS;22,5mm; ART.NR.912 1.74502.105/1002;
H1 + = 8.3	158698 RAFI	LAMPENFASSUNG 220V; LAMPENFASSUNG 220V/1,2W; SCHRAUBANSCHLUSS; ART.NR.912 5.00070.021;
H1 + = 8.3	121820 SIEMENS AG	GLUEHLAMPE130VB9S
K1 + = 7.7	83605 SIEMENS	SCHUETZ 3TH4031-OAG2;3S+1OE;110V;50/60HZ SCHNAPPBEFESTIGUNG
K2 + = 8.2	83605 SIEMENS	SCHUETZ 3TH4031-OAG2;3S+1OE;110V;50/60HZ SCHNAPPBEFESTIGUNG
K3 + = 8.2	48879 SIEMENS	SCHUETZ 3TH4244-OAG2;4S+4OE;110V;50/60HZ SCHNAPPBEFESTIGUNG

Fortsetzung auf Seite 3

BMK Ort Anlage Bl.Pfad	Sachnummer Hersteller	Benennung Technische Beschreibung
K4 + = 8.4	48876 SIEMENS	SCHUETZ 3TH4022-OAG2;2S+2OE;110V;50/60HZ SCHNAPPBEFESTIGUNG
K5 + = 12.3	92014 SIEMENS	SCHUETZ 3TH2031-OBB4;3S+1OE;24VDC SCHNAPPBEFESTIGUNG
K6 + = 8.7	83605 SIEMENS	SCHUETZ 3TH4031-OAG2;3S+1OE;110V;50/60HZ SCHNAPPBEFESTIGUNG
K7 + = 12.2	92014 SIEMENS	SCHUETZ 3TH2031-OBB4;3S+1OE;24VDC SCHNAPPBEFESTIGUNG
K8 + = 9.5	92014 SIEMENS	SCHUETZ 3TH2031-OBB4;3S+1OE;24VDC SCHNAPPBEFESTIGUNG
K10 + = 10.2	48349 LUETZE	RELAISPLATTE RPE-2E2S/2W 24V DC;ART.NR.710765 MIT STECKSOCKEL FUER 2 KAMMRELAIS MIT 4 WECHSLERN ; SCHRAUBANSCHLUSS
K11 + = 10.3	48349 LUETZE	RELAISPLATTE RPE-2E2S/2W 24V DC;ART.NR.710765 MIT STECKSOCKEL FUER 2 KAMMRELAIS MIT 4 WECHSLERN ; SCHRAUBANSCHLUSS
K12 + = 10.3	48349 LUETZE	RELAISPLATTE RPE-2E2S/2W 24V DC;ART.NR.710765 MIT STECKSOCKEL FUER 2 KAMMRELAIS MIT 4 WECHSLERN ; SCHRAUBANSCHLUSS
K13 + = 10.4	48349 LUETZE	RELAISPLATTE RPE-2E2S/2W 24V DC;ART.NR.710765 MIT STECKSOCKEL FUER 2 KAMMRELAIS MIT 4 WECHSLERN ; SCHRAUBANSCHLUSS

Fortsetzung auf Seite 4

BMK Ort Anlage Bl.Pfad	Sachnummer Hersteller	Benennung Technische Beschreibung
K30 + = 11.1	83605 SIEMENS	SCHUETZ 3TH4031-OAG2;3S+1OE;110V;50/60HZ SCHNAPPBEFESTIGUNG
K31 + = 11.2	48879 SIEMENS	SCHUETZ 3TH4244-OAG2;4S+4OE;110V;50/60HZ SCHNAPPBEFESTIGUNG
K32 + = 11.4	83605 SIEMENS	SCHUETZ 3TH4031-OAG2;3S+1OE;110V;50/60HZ SCHNAPPBEFESTIGUNG
K33 + = 11.5	48876 SIEMENS	SCHUETZ 3TH4022-OAG2;2S+2OE;110V;50/60HZ SCHNAPPBEFESTIGUNG
K34 + = 11.6	83605 SIEMENS	SCHUETZ 3TH4031-OAG2;3S+1OE;110V;50/60HZ SCHNAPPBEFESTIGUNG
K36 + = 11.7	48876 SIEMENS	SCHUETZ 3TH4022-OAG2;2S+2OE;110V;50/60HZ SCHNAPPBEFESTIGUNG
L1 + = 6.6	114547 JAHNSMUELLER	DROSSEL EI 105 A-4 ; BV.NR:27148
L2 + = 6.7	114547 JAHNSMUELLER	DROSSEL EI 105 A-4 ; BV.NR:27148
M6 + = 7.3	92425 PFANNENBERG	FILTERLUEFTER FLF 01;IP54;115VAC;20W;60HZ;0,22A MIT STANDARDFILTERMATTE

Fortsetzung auf Seite 5

BMK Ort Anlage Bl.Pfad	Sachnummer Hersteller	Benennung Technische Beschreibung
M6 + = 7.3	122344 PFANNENBERG	AUSTRITTSFILTER AFF 01 ; IP 54 ; MIT STANDARD-FILTERMATTE
N1 + = 6.4	154533 UNITEK	REGLER Q2 220/160-10;STEUERSPANNUNG 220V;
Q1 + = 1.1	83600 KRAUS & NAIMER	HAUPTSCHALTER C42;C11200-600E;80A;2S V850D;K-GRIFF SCHWARZ G411
Q2 + = 1.3	92422 KLOECKN.MOELLER	MOTORSCHUTZSCHALTER PKZ 2/ZM-40 + NHI11; 32-40A USA-AUSFUEHRUNG
Q3 + = 1.5	87318 KLOECKN.MOELLER	MOTORSCHUTZSCHALTER PKZM 1-4 ; 2.4-4.0 A
Q3 + = 1.5	87339 KLOECKN.MOELLER	HILFSSCHALTER NHI11-PKZM1;1S+1OE
Q4 + = 2.1	87318 KLOECKN.MOELLER	MOTORSCHUTZSCHALTER PKZM 1-4 ; 2.4-4.0 A
Q4 + = 2.1	87339 KLOECKN.MOELLER	HILFSSCHALTER NHI11-PKZM1;1S+1OE
Q5 + = 6.1	87318 KLOECKN.MOELLER	MOTORSCHUTZSCHALTER PKZM 1-4 ; 2.4-4.0 A

Fortsetzung auf Seite 6

BMK Ort Anlage Bl.Pfad	Sachnummer Hersteller	Benennung Technische Beschreibung
Q5 + = 6.1	87339 KLOECKN.MOELLER	HILFSSCHALTER NHI11-PKZM1;1S+1OE
Q6 + = 7.2	87318 KLOECKN.MOELLER	MOTORSCHUTZSCHALTER PKZM 1-4 ; 2.4-4.0 A
Q7 + = 1.7	87318 KLOECKN.MOELLER	MOTORSCHUTZSCHALTER PKZM 1-4 ; 2.4-4.0 A
Q7 + = 1.7	87339 KLOECKN.MOELLER	HILFSSCHALTER NHI11-PKZM1;1S+1OE
R1 + = 6.7	114548 FRIZLEN	BREMSWIDERSTAND EZB 100X35-10 ; 65W ; 10 OHM
S1 + = 2.4	68350 EUCHNER	REIHENGRENZTASTER RGBF 02 R16-502 2 SCHALTELEMENTE
S2 + = 2.3	68350 EUCHNER	REIHENGRENZTASTER RGBF 02 R16-502 2 SCHALTELEMENTE
S3 + = 13.2	86995 SIEMENS	POSITIONSSCHALTER 3SE3 120-1D ; DIN EN 50041 SPRUNGSCHALTGLIEDER ZWANGSOEFFNUNG
S4 + = 13.2	135315 SUCO	DRUCKSCHALTER TYP 9059 ; 10-100 BAR

Fortsetzung auf Seite 7

BMK Ort Anlage Bl.Pfad	Sachnummer Hersteller	Benennung Technische Beschreibung
S6 + = 13.3	45563 BERNSTEIN	FUSS-SCHALTER F3-U1/U1/U1 UN NR.606.3611.026 3 PEDALE MIT UNFALLSCHUTZHAUBE
S7 + = 12.2	45563 BERNSTEIN	FUSS-SCHALTER F3-U1/U1/U1 UN NR.606.3611.026 3 PEDALE MIT UNFALLSCHUTZHAUBE
S8 + = 12.3	45563 BERNSTEIN	FUSS-SCHALTER F3-U1/U1/U1 UN NR.606.3611.026 3 PEDALE MIT UNFALLSCHUTZHAUBE
S10 + = 13.6	109588 i f m	NAEHERUNGSSCHALTER efector IF-3002-BPKG;10-55VDC S=2mm;BUENDIG;M12X1;SCHLIESSER 2m KABELLAENGE
S11 + = 7.7	158693 RAFI	SCHLOSSTASTE SCHLOSSTASTE OHNE RASTUNG; 22,3mm; ART.NR.912 1.30045.204
S11 + = 7.7	158700 RAFI	KONTAKTELEMENT 1S KONTAKTELEMENT 1S; MIT SCHRAUBANSCHLUSS; ART.NR.912 5.00100,053;
S12 + = 7.6	158701 RAFI	DRUCKTASTE ROT DRUCKTASTE ROT; 22,3mm; MIT ABDECKSCHEIBE; ART.NR.912 1.30040.554/1303
S12 + = 7.6	158699 RAFI	KONTAKTELEMENT 1OE KONTAKTELEMENT 1OE; SCHRAUBANSCHLUSS; MIT ZWANGSTRENNUNG; ART.NR.912 5.00100.054;
S13 + = 7.6	158695 RAFI	PILZSCHALTTASTE ROT PILZSCHALTTASTE ROT; 22,3mm;MIT ABDECKSCHEIBE; ART.NR.912 1.30043.204/0301;

Fortsetzung auf Seite 8

BMK Ort Anlage Bl.Pfad	Sachnummer Hersteller	Benennung Technische Beschreibung
S13 + = 7.6	158699 RAFI	KONTAKTELEMENT 1OE KONTAKTELEMENT 1OE; SCHRAUBANSCHLUSS; MIT ZWANGSTRENNUNG; ART.NR.912 5.00100.054;
S13A + = 7.7	78084 SIEMENS	PILZDRUCKTASTER 3SB10 00-1FC01 ; ROT ; NOT-AUS DREHENTRIEGELUNG ; 30mm DURCHMESSER
S13A + = 7.7	121851 SIEMENS	SCHALTELEMENT 3SB13 00-OC; MIT HALTER 1 ZWANGSOEFFNER FUER NOT-AUS FUNKTIONEN
S14 + = 9.4	114139 CROUZET	GRENZTASTER 83 732.3;250V 5A;ROLLENSTOESSEL M16X1;IP66;2m KABELLAENGE
S15 + = 9.4	114139 CROUZET	GRENZTASTER 83 732.3;250V 5A;ROLLENSTOESSEL M16X1;IP66;2m KABELLAENGE
S16 + = 13.5	109588 i f m	NAEHERUNGSSCHALTER efector IF-3002-BPKG;10-55VDC S=2mm;BUENDIG;M12X1;SCHLIESSER 2m KABELLAENGE
S18 + = 13.6	109588 i f m	NAEHERUNGSSCHALTER efector IF-3002-BPKG;10-55VDC S=2mm;BUENDIG;M12X1;SCHLIESSER 2m KABELLAENGE
S21 + = 11.1	86995 SIEMENS	POSITIONSSCHALTER 3SE3 120-1D ; DIN EN 50041 SPRUNGSCHALTGLIEDER ZWANGSOEFFNUNG
T1 + = 7.2	2181 FREI	STEUERTRANSFORMATOR Q 250-89.00-320/945VA;50/60HZ;IPOO;T40/B PRIMAER:200-550V;SEKUNDAER:115/230V GETRENNTE WICKLUNGEN,FUSSWINKELBEFESTIGUNG

Fortsetzung auf Seite 9

BMK Ort Anlage Bl.Pfad	Sachnummer Hersteller	Benennung Technische Beschreibung
T2 + = 6.1	142201 JAHNSMUELLER	EINPF.TRAFO 208V; EINPFASEN TRAFO 800VA; UI 120 AL;BV-NR.25 875; PRIM:208V;4,2A; SEK:155-0-155V;2,7A;
Z10 + = 7.1	92428 SCHAFFNER	NETZFILTER FN 352Z 10/03 ; 0,8W ; MAX.250V,400HZ DAEMPFUNG UND UEBERSPANNUNGSSCHUTZ
1K1 + = 9.2	48878 SIEMENS	SCHUETZ 3TF4422-OAG2;2S+2OE;GR2;110V;50/60HZ SCHNAPPBEFESTIGUNG
1K2 + = 3.5	92014 SIEMENS	SCHUETZ 3TH2031-OBB4;3S+1OE;24VDC SCHNAPPBEFESTIGUNG
1K3 + = 3.6	92014 SIEMENS	SCHUETZ 3TH2031-OBB4;3S+1OE;24VDC SCHNAPPBEFESTIGUNG
1K5 + = 9.4	44260 SIEMENS	SCHUETZ 3TH4031-OBB4;3S+1OE;24VDC SCHNAPPBEFESTIGUNG
1K6 + = 4.2	92014 SIEMENS	SCHUETZ 3TH2031-OBB4;3S+1OE;24VDC SCHNAPPBEFESTIGUNG
1K7 + = 4.3	92014 SIEMENS	SCHUETZ 3TH2031-OBB4;3S+1OE;24VDC SCHNAPPBEFESTIGUNG

Ende der Liste

SIEMENS

Servomotoren 1HU3 05

Servomotors
Servomoteurs
Servomotores
Servomotori
Inställningsmotorer

Betriebsanleitung/Instructions Bestell-Nr./Order No.: EWN 610.41166/21b

Bauformen
Types of construction
Formes
Formas constructivas
Forme costruttive
Utföringsformer

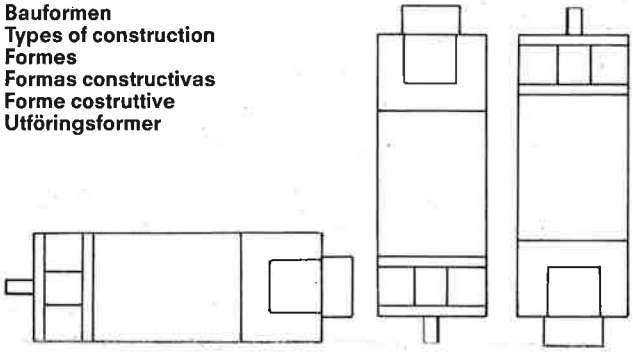

IM B5 IM V1 IM V3

1HU3 054
1HU3 056
1HU3 058

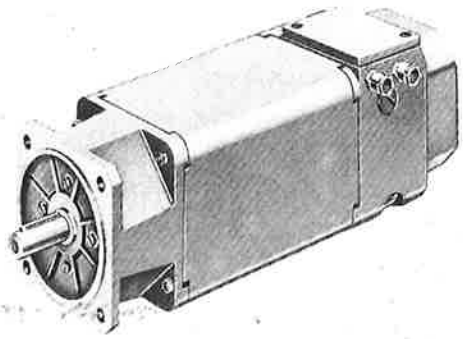

Schaltung
Circuit diagram
Schéma
Esquema
Schema
Koppling

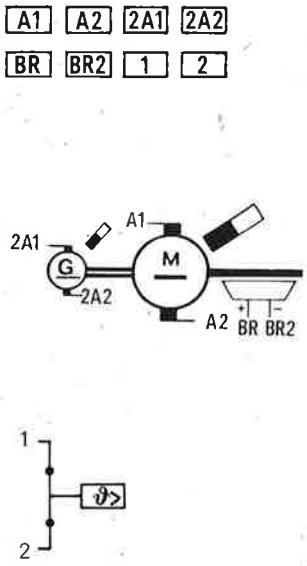

Fig. 1

A1, A2 Motoranschluß
Motor connection
Raccordement du moteur
Conexión del motor
Collegamento del motore
Motoranslutning

2A1, 2A2 Tachogenerator-Anschluß
Tachogenerator connection
Raccordement de la dynamo tachymétrique
Conexión del generador tacométrico
Collegamento della dinamo tachimetrica
Takogeneratoranslutning

BR, BR2 Bremsanschluß
Brake terminals
Raccordement du frein
Conexión del freno
Allacciamento del freno
Bromsanslutning

1, 2 Thermowächter-Anschluß
Temperature monitor connection
Contrôleur de température raccordement
Conexión del termostato
Attacco per protezione termica
Temperaturvakt Anslutning

Anschluß für Drehmelder und Impulsgeber (s. a. Informationsdienst E 311-123A).

Terminals for synchro and pulse generator (see Information Bulletin E 311-123A).

Voir feuillet documentaire E 311-123A pour la connexion d'un résolveur ou d'un impulseur.

Respecto a la conexión del sincrón y del emisor de impulsos véase la información E 311-123A.

Attacco per sincro e per datore impulsi, vedere bollettino informazioni E 311-123A.

Anslutning för vridningsgivare och impulsgivare (se information E 311-123A).

Beschreibung

Anwendungsbereich

Die Motoren sind selbstgekühlt (Schutzart IP 54). Sie können in überdachten Räumen mit normalen klimatischen Bedingungen aufgestellt werden. Kühlmitteltemperaturen bis 40 °C zulässig.

Die Motoren sind mit voller Paßfeder dynamisch ausgewuchtet. Das Auf- und Abziehen von Antriebselementen (z. B. Riemenscheibe, Kupplungsscheibe, Zahnrad) und Wälzlagern ist grundsätzlich mit einer geeigneten Vorrichtung auszuführen. Gewinde im Wellenende benutzen.

Description

Application

The motors are non-ventilated (degree of protection IP 54). The machines can be installed in covered areas subject to normal climatic conditions. The maximum permissible cooling air temperature is 40 °C.
The motors are dynamically balanced with full parallel key in position. Fitting and dismantling transmission elements (for example, belt pulley, coupling flange, gear wheel) and rolling-contact bearings should be carried out using suitable devices. Use the tapped hole in the shaft end.

Montage

Der Anbau muß so erfolgen, daß eine ausreichende Verlustabfuhr durch Strahlung und natürliche Konvektion gewährleistet ist. An den Motoren können hohe Oberflächentemperaturen auftreten. Bei Bedarf Berührungsschutzmaßnahmen vorsehen.
Die Bedienungsöffnungen am BS-Lagerschild (6.20) müssen für Wartungsarbeiten zugänglich sein

Anschließen (s. Fig. 1)

Vorsicht! Alle Anschluß- und Wartungsarbeiten nur im spannungslosen Zustand der Anlage vornehmen! Durch die Dauermagneterregung entsteht sowohl an den Motorklemmen als auch an den Tachogeneratorklemmen eine Spannung, wenn der Läufer gedreht wird!
Motoranschluß: Läuferspannung muß mit der Angabe auf dem Leistungsschild übereinstimmen. Ausreichend bemessene Anschlußleitungen an den Anschlußklemmen im Klemmenkasten, Schutzleiter an diese Klemme ⏚ anschließen. Für Zugentlastung des Anschlußkabels sorgen.
Tachogeneratoranschluß: Leistungsschild- und Schaltbildangaben beachten!
Anschluß erfolgt mittels vorhandener Steckhülsen an den Bürstenhaltern. Steckhülsen mit geeignetem Werkzeug anquetschen oder anlöten. Für Zugentlastung der Anschlußleitung sorgen.

Installation

The motors must be installed such that adequate cooling is achieved by radiation and natural convection. High surface temperatures may occur on the motors. If necessary, provide protection against touching.
The service openings on the end shield – non-drive end – (6.20) must be accessible for maintenance.

Connection (see Fig. 1)

Attention: All connecting and maintenance work must be carried out with the motor de-energized. With the permanent magnet excitation there is always a voltage at the motor terminals and tachogenerator terminals if the rotor is turned!

Motor connection: The armature voltage must agree with that stated on the rating plate. Connect adequately dimensioned connecting leads to the terminals in the terminal box. Make sure the protective earth is connected to the terminal marked ⏚. Ensure there is adequate strain relief for the connecting cable.
Tachogenerator connection: Observe the data on the rating plate and in the circuit diagram. Connection is by means of the sockets provided on the brush holders. Crimp on the sockets with suitable tools or solder on. Ensure there is adequate strain relief for the connecting cable.

Wartung

Vor Demontage des Motors (z. B. Lagerwechsel) die ursprüngliche Lage der Lagerschilde zum Gehäuse markieren.

Kommutator und Kohlebürsten

In regelmäßigen, zeitlichen Abständen durch die Öffnung des Köcherbürstenhalters (Kohle vorher entfernen) Kommutator beobachten. Für weitergehende Begutachtung ist Abbau des Lagerschildes notwendig. Wenn Riefen oder Brandstellen an der Oberfläche des Kommutators nicht mehr mit feinem Schmirgelleinen zu entfernen sind, ist dieser zu überdrehen (Glimmerisolierung zwischen den Kommutatorlamellen sauber ausfräsen.
Auswechseln der Kohlebürsten: Die Motoren haben Köcherbürstenhalter. Nachprüfen der Bürsten nach ca. 1000 Motorlaufstunden durch Abschrauben der Kappe 7.13. Normallänge der Bürste 25 mm, zulässiger Abrieb bis auf 10 mm, dann Bürsten erneuern. Nur gleiche Qualität der Bürsten, wie vom Werk geliefert, einsetzen.

In geeigneten Zeitabständen ist die Reinigung der Maschine zu empfehlen, dabei ist insbesondere auf die Beseitigung eventueller Kohlestaubablagerungen zu achten.
Die Schutzsenkungen für die Bürstenköcher im BS-Lagerschild sind besonders sauberzuhalten. Nach jedem Bürstenwechsel vor dem Einlegen der Dichtung (7.14) Schutzsenkung sorgfältig mit trockener Druckluft ausblasen.

Lagerwechsel

Die Motoren haben Lager mit Dauerschmierung.

Achtung! AS- und BS-Lager haben unterschiedliche Größen. Es werden 2RS-C3-Lager verwendet. Die Dichtscheiben der Lager müssen aus wärmebeständigem Material (bis 180 °C) sein. Bei Wartung des Kommutators sollten auch die Lager gewechselt werden.

Füllung des Fettraumes nach DIN 625 Bl. 2. Fettsorte: Lithium-Komplex-Fett, das der Laufprüfung B nach DIN 51806 genügt, z. B. UNIREX N3 (Fa. Esso).

Maintenance

Before desmantling the motor (e.g. for changing the bearings), mark the endshields and the frame to ensure that they are refitted in the same position.

Commutator and carbon brushes

At regular intervals inspect the commutator through the opening of the cartridge-type brush holder (remove the brush first). For a more detailed evaluation it is necessary to remove the end shield. If scoring or burn marks on the surface of the commutator can no longer be removed with fine emery cloth, the commutator must be resurfaced by skimming (undercut the mica insulation between the commutator segments).
Replacing the carbon brushes: The motors have cartridge-type brush holders. After 1000 hours of motor operation remove cap 7.13 and check the length of the brush. The normal length is 25 mm. When they have worn down to 10 mm (minimum permissible value) the brushes must be replaced. Only use brushes of the same quality as those provided by the works.
It is also recommended to clean the machine at suitable intervals, taking particular care to remove any carbon dust deposits.

The protective recesses for the brush-holder boxes in the end shield at the non-drive end are to be kept specially clean. When changing the brushes, always clean the protective recess with dry compressed air prior to inserting the seal (7.14).

Changing the bearings

The motors have prelubricated bearings.

Important: The drive and non-drive end bearings are of different sizes.
The bearings used are of type 2RS-C3. The sealing rings of the bearings must consist of a material which resists heat up to 180 °C. It is advisable to change the bearings each time commutator maintenance is carried out.

Fill the grease chamber to approximately 35 % of its capacity. Type of grease: Lithium complex grease satisfying running test B to DIN 51806, e.g. UNIREX N3 (Esso).

Tachogenerator

(siehe Betriebsanleitung 610.41174/21)

Der Tachogenerator ist praktisch wartungsfrei. Er kann ohne Gefahr einer Entmagnetisierung demontiert werden. Die Kohlebürsten nach Abnutzung auf etwa 7 mm, satzweise in gleicher Ausführung und Qualität, wie vom Werk verwendet, auswechseln und einschleifen.

Demontage des Läufers (8.84): M6-Befestigungsschraube (8.85) herausschrauben. Stahlstift (4,8×30) bis zum Anschlag in die Motorwelle einstecken (zum Schutz der Zentrierung im Wellenende). An Stelle der Befestigungsschraube eine M8-Schraube (Mindestlänge 30 mm) eindrehen und dadurch Läufer vom konischen Sitz auf der Motorwelle (Kegel 1:10) abdrücken. Mitdrehen des Läufers durch Halten am Sechskant (SW19) der Läufernabe verhindern.
Bei Montage des Läufers M6-Befestigungsschraube (8.85) mit 10 Nm anziehen. Maximale Rundlaufabweichung des Kommutators 0,04 mm.

Bremse

Die Dauermagnet-Haltebremse arbeitet nach dem Ruhestromprinzip. Sie öffnet bei Anlegen einer Gleichspannung von 24 V ± 10 %. Die Spannung muß innerhalb des angegebenen Toleranzbereichs liegen, da sonst die Betriebssicherheit gefährdet ist. Bei eingeschaltetem Motor muß die Bremse immer erregt, d. h. geöffnet sein. Beim Ausschalten der Bremse (entregen) oder bei Stromausfall wird die Ankerscheibe (2.20) vom Dauermagneten angezogen und dadurch die Motorwelle festgehalten. Bremsenanschluß siehe Fig. 1.
Der Bremsenanschluß erfolgt an der zweipoligen Reihenklemme (BR, BR2), die am Ständer (8.86) des Tachogenerators befestigt ist.

Demontage der Bremse

Achtung! Beim Abklemmen der Bremsenwicklung wird die Ankerscheibe (2.20) sofort angezogen. Wenn ein Drehen des Läufers (3.00) oder der Ankerscheibe (2.20) notwendig ist, oder das Lagerschild (1.40) mit dem Magnetkörper vom Läufer abgezogen werden muß, muß die Bremsenwicklung an Spannung gelegt werden. Eine gewaltsame Trennung von Ankerscheibe (2.20) und Magnetkörper (2.10) führt zur Verformung der Membranfeder an der Ankerscheibe.

a) Innensechskantschrauben (1.26) lösen.
b) Muttern (1.37) lösen und AS-Lagerschild (1.40) abziehen.
c) Bremse unter Spannung setzen, Bolzenschrauben der Abziehvorrichtung in Gewindelöcher des Magnetkörpers (2.10) einschrauben. Abziehvorrichtung auf den Wellenspiegel aufsetzen und anziehen. Magnetkörper (2.10) mit dem Lager etwa 20 mm abziehen.
d) Bremsenzuleitung abklemmen und aus dem Gehäuse herausziehen. Magnetkörper (2.10) ganz abziehen. Abgezogenes Lager nicht wieder verwenden.
e) Im Bedarfsfall kann die Ankerscheibe (2.20) ausgetauscht werden: Die mit Loctite gesicherten Schrauben (2.22) lösen und Ankerscheibe abnehmen.

Montage der Bremse

a) Ankerscheibe (2.20) mit Schrauben (2.22) an der Bremsscheibe (2.30) befestigen. Schrauben mit Loctite Typ 0572 oder Fluid D. sichern.
b) Den Magnetkörper unter Spannung setzen und an die Ankerscheibe anlegen. Danach Spannung wegnehmen.
c) Lager (1.60) auf Welle warm aufziehen.
d) Zentrierrand des erneut elektrisch erregten Magnetkörpers zum Lageraußenring vorzentrieren, um beim Aufziehen des AS-Lagerschildes ein Verkanten zu vermeiden.
e) Bremsenzuleitung durch die Bohrung „N" stecken und im Klemmenkasten an die Klemmen (BR, BR2) anschließen (s. Fig. 1). BS-Lagerschild an das Gehäuse heranschieben. Bremse unter Spannung setzen. Darauf achten, daß die Nordpolbohrung (N) im Gehäuse frei von Vergußmasse ist und oben liegt. Eventuell Vergußmasse mit einem Schraubenzieher durchstoßen.

f) In eine der Gewindebohrungen des Magnetkörpers (2.10) eine Stiftschraube als Montagehilfe einschrauben. Dann das AS-Lagerschild (1.40) über Wellenende und Stiftschraube aufschieben. Das Lagerschild mit den Muttern (1.37) und Federscheiben (1.38) am Gehäuse befestigen.
g) Magnetkörper (2.10) am AS-Lagerschild durch die Innensechskantschrauben (1.28) befestigen. Anzugsmoment 2,9 Nm.
h) Nicht mit Hammer auf das Wellenende schlagen.

Nachrüsten der Bremse

Nachträglicher Einbau der Bremse in den Motor ist möglich. Bremsenbauteile und Einbauunterlagen im Werk anfordern.

Tachogenerator

(see instruction 610.41174/21)

The tachogenerator requires practically no maintenance. It can be dismantled without the risk of de-magnetization. When the carbon brushes have worn down to approx. 7 mm they must be replaced in a set. Only use brushes of the same type and grade as those provided by the works. Bed them in.
Dismantling the rotor (8.84): Remove the M6 fixing bolt (8.85). Insert steel pin (4.8×30) completely into the motor shaft (to protect the centre hole in the shaft end). In place of the fixing screw, screw in an M8 bolt (minimum length 30 mm). In this way the rotor is separated from the motor shaft (1:10 taper). Prevent rotor from turning by engaging the hexagon nut (19 mm across flats) on the rotor hub.

When assembling the rotor apply 10 Nm torque to the M6 fixing bolt (8.85). Maximum radial runout for the commutator is 0.04 mm.

Brake

The permanent magnet holding brake operates on the closed-circuit principle. It opens when a d.c. voltage of 24 V ±10 % is applied. These voltage limits must be adhered to, otherwise the degree of operational safety is reduced. When the motor is switched on, the brake must always be energized, i.e. open. When the brake is de-energized or, if the power fails, the armature disk (2.20) is attracted by the permanent magnet and arrests the motor shaft. For brake connection see Fig. 1.
The brake connection is made by means of a two-way terminal block (BR, BR2) which is mounted to the stator (8.86) of the tachogenerator.

Dismantling the brake

Note: When the brake coil is disconnected the armature disk (2.20) will be attracted at once. If it is necessary to rotate the rotor (3.00) or the armature disk (2.20), or the end shield (1.40) together with the magnet body of the rotor must be withdrawn, the brake coil must be energized. The use of force in separating the armature disk (2.20) from the magnet body (2.10) would cause the disk spring to become deformed.

a) Undo hex. socket screws (1.26).
b) Undo nuts (1.37) and remove end shield – drive end – (1.40).
c) Energize the brake release coil and screw the rods of the puller into the tapped holes of the brake (2.10). Position the puller on the shaft end face and tighten up. Withdraw magnet body (2.10) together with the bearing by about 20 mm.

d) Disconnect the brake lead and withdraw from the stator housing. Remove magnet body (2.10) completely. Do not reuse the bearing once withdrawn.
e) If necessary, replace the armature disk (2.20). Remove the armature disk by undoing the screws (2.22). The screws are secured with loctite.

Assembly of the brake

a) Screw the armature disk (2.20) to the brake disk (2.30) using screws (2.22). Secure the screws with type 0572 or fluid D. loctite.

b) Energize the magnet body and position it against the armature disk. The brake release coil can now be deenergized.
c) Push the bearing (1.60) onto the shaft whilst hot.
d) Re-energize the brake and centre the centering rim of the magnet body against the outer bearing ring in order to ensure that the end shield – drive end – is pulled on true.
e) Bring out the brake lead through bore "N" and connect to terminals BR, BR2 in the terminal block (see Fig. 1). Push the end shield – non-drive end – into contact with the stator housing. Energize the brake release coil. Ensure that the north pole bore (N) in the stator housing is free from casting compound and lies at the top. Any casting compound fouling the hole should be pushed out with a screwdriver.
f) To facilitate fitting, screw a stud into the magnet body (2.10) and then place the end shield – drive end – (1.40) over the shaft end and stud. Attach the end shield to the stator housing using nuts (1.37) and spring washers (1.38).

g) Attach magnet body (2.10) to the end shield – drive end – using hex. socket screws (1.28). Tightening torque 2.9 Nm.
h) Do not hit the shaft extension with a hammer.

Subsequent fitting of the brake

The brake may be subsequently installed in the motor. Brake component parts and fitting instructions and drawings are obtainable from the works.

Description

Utilisation

Les moteurs sont à refroidissement naturel (indice de protection IP 54). Ils peuvent être installés dans des locaux abrités, sous des conditions climatiques normales. Température maximale admissible du fluide réfrigérant 40 °C.
Les moteurs sont équilibrés dynamiquement avec clavette entière. Il faut toujours se servir d'un dispositif approprié pour monter et démonter les organes de transmission (poulie à courroie, plateau d'accouplement, roue dentée, pignon, etc.) et les roulements. Utiliser le trou taraudé du bout d'arbre.

Montage

Le montage doit être effectué de manière à assurer une dissipation calorifique suffisante par rayonnement et convection naturelle. La température superficielle du moteur peut atteindre des valeurs élevées. Prévoir au besoin des mesures de protection contre les contacts directs.
Les ouvertures de visite du flasque-palier côté B (6.20) doivent être accessibles pour les travaux d'entretien.

Raccordement (voir figure 1)

Important: ne procéder aux travaux de raccordement et d'entretien que si l'installation est hors tension. L'excitation par aimants permanents donne naissance à une tension aux bornes du moteur et à celles de la dynamo tachymétrique lorsqu'on fait tourner le rotor.

Raccordement du moteur: la tension rotorique doit coïncider avec la valeur figurant sur la plaque signalétique. Raccorder des conducteurs de section suffisante aux bornes de raccordement de la boîte à bornes; brancher le conducteur de protection à la borne ⏚. Procéder à l'amarrage du câble de raccordement.

Raccordement de la dynamo tachymétrique: observer les indications de la plaque signalétique et du schéma de branchement.
Le raccordement a lieu aux porte-balais au moyen de fiches Faston. Sertir ou souder ces dernières avec un outil approprié. Procéder à l'amarrage du câble de raccordement.

Entretien

Avant le démontage du moteur (par exemple en cas de remplacement du palier), repérer la position initiale du flasque-palier par rapport à la carcasse.

Collecteur et balais en charbon

Observer le collecteur à intervalles réguliers par l'ouverture d'une cage de balai (après avoir enlevé le balai). Pour toute inspection plus poussée, il faut démonter le flasque-palier. Si les stries ou les traces d'amorçage à la surface du collecteur ne peuvent pas être enlevées à la toile d'émeri fine, il faut reprendre ce dernier au tour (fraiser méticuleusement l'isolation entrelames en micanite).

Remplacement des balais en charbon: les moteurs possèdent des cages de balais; vérifier les balais toutes les 1000 heures de marche du moteur environ, en dévissant le capot 7.13. Longueur normale du balai 25 mm, usure admissible jusqu'à 10 mm résiduels, en-deçà de cette valeur remplacer les balais. Utiliser des balais de même qualité que ceux livrés par l'usine.

Il est conseillé de nettoyer la machine à intervalles convenables, en veillant particulièrement à l'élimination des dépôts de poussière de charbon.
Les lamages pratiqués dans le flasque-palier côté B pour les cages sont à tenir en parfait état de propreté. Passer le lamage au jet d'air comprimé sec après le remplacement des balais et avant de poser le joint (7.14).

Remplacement des roulements

Les moteurs possèdent des roulements graissés à vie.

Attention: Les roulements côté D et côté N sont de taille différente. Il est fait usage de roulements 2RS-C3. Leurs déflecteurs doivent être en matériau résistant à la chaleur (jusqu'à 180 °C). Lors de l'entretien du collecteur, il faudrait aussi remplacer les roulements.

Remplissage de la chambre à graisse: 35 % environ. Graisse: graisse au lithium satisfaisant à l'essai de marche B selon DIN 51806, par exemple UNIREX N3 (Esso).

Descripción

Aplicación

Los motores tienen autorrefrigeración (clase de protección IP 54) y pueden ser instalados en locales cubiertos con condiciones climáticas normales. Temperatura admisible del medio refrigerante: hasta 40 °C.
Los motores han sido equilibrados dinámicamente con la chaveta completa ya montada. Los elementos de transmisión (p. ej.: poleas, bridas de acoplamiento y ruedas dentadas) y los rodamientos tienen que ser montados y desmontados siempre con los dispositivos apropiados. Utilizar la rosca prevista en el extremo del árbol.

Montaje

El montaje debe hacerse de forma que, mediante la radiación y la convección natural, quede garantizada la evacuación del calor producido por las pérdidas. Las superficies de los motores pueden alcanzar altas temperaturas, por lo que, caso dado, se deberán prever las protecciones necesarias contra contactos involuntarios.
Las aberturas previstas en el escudo porta-cojinetes (6.20), lado B, deben quedar accesibles para poder realizar trabajos de mantenimiento.

Conexión (véase fig. 1)

Cuidado: Las conexiones y los trabajos de mantenimiento se deben realizar sólo y cuando la instalación esté sin tensión. Debido a la excitación con imanes permanentes, los bornes del motor y del generador tacométrico estarán bajo tensión siempre que gire el rotor.
Conexión del motor: La tensión del rotor debe coincidir con la indicada en la placa de características. A los bornes dispuestos en la correspondiente caja se deben conectar conductores suficientemente dimensionados; el conductor de protección se conecta al borne marcado con ⏚. Prestar atención a que el cable de acometida no quede sometido a esfuerzos por tracción.
Conexión del generador tacométrico: Observar las indicaciones hechas en la placa de características y en el esquema de conexiones. La conexión se hace con los casquillos previstos al efecto, haciéndolos encajar sobre los porta-escobillas; soldarlos o aplastarlos con una herramienta apropiada. El cable de acometida no debe quedar sometido a esfuerzos por tracción.

Mantenimiento

Antes de desmontar el motor (p. ej. para cambiar los cojinetes) marcar la posición actual de los escudos respecto a la caja del motor.

Colector y escobillas

Comprobar periódicamente el estado del colector, haciéndolo a través de los orificios de los porta-escobillas (quitar primero las escobillas). Para una inspección más detallada, hay que quitar el escudo porta-cojinetes. El colector tendrá que ser repasado a torno cuando en su superficie se aprecien estrías o quemaduras que no puedan ser eliminadas con tela de esmeril de granulación fina (fresar minuciosamente el aislamiento de mica que hay entre las delgas del colector).
Recambio de las escobillas: Los motores tienen porta-escobillas tipo bolsa. Comprobar el estado de las escobillas después de unas 1000 horas de servicio, para lo que hay que desatornillar la caperuza (7.13). Las escobillas nuevas tienen una longitud de 25 mm. Desgaste admisible hasta unos 10 mm; cuando hayan alcanzado esta longitud, recambiarlas. Emplear escobillas que sean de la misma calidad como la que suministra la fábrica.
Recomendamos limpiar los motores en intervalos adecuados, prestando especial atención a la eliminación de los depósitos de polvo de carbón, que se hayan podido formar.
Muy importante es también la limpieza de los avellanados para los porta-escobillas del escudo portacojinetes del lado B. Después de cada cambio de escobillas y antes de colocar la junta (7.14), limpiar minuciosamente con aire comprimido seco dichos avellanados.

Recambio de los cojinetes

Los motores llevan cojinetes con lubrificación permanente.

Atención! Los cojinetes de los lados A y B son de tamaño diferente. Se utilizan cojinetes 2 RS-C3. Las arandelas de hermetización de los cojinetes deben ser de materiales resistentes al calor (hasta 180 °C). Al efectuar los trabajos de mantenimiento del colector, convendría renovar los cojinetes.

Carga de la cavidad para grasa: 35 % aprox. Tipo de grasa: A base de litio, que satisfaga la prueba de marcha B, según DIN 51806, por ejemplo, UNIREX N3 (Esso).

SIEMENS

Sicherheitsinformationen für elektrische Betriebsmittel zum Einsatz in Starkstromanlagen

Safety information for electrical equipment for use in heavy current installations

Informations relatives à la sécurité de matériels électriques destinés à être utilsés dans des installations à courant fort

Informaciones de seguridad para los equipos eléctricos que se utilicen en instalaciones de energía

Informazioni per la sicurezza nell' impiego di dispositivi elettrici in impianti ad alta tensione

Säkerhetsinformation för elektrisk utrustning som används i starkströmsanläggningar

Betriebsanleitung / Instructions EWN-Bestell-Nr./Order No.: 610.42356/21

Alle Rechte vorbehalten. All rights reserved.
Tous droits réservés. Nos reservamos todos los derechos.
Tutti i diritti riservati. All rätt förbehålles.

DEUTSCH

Dieses Informationsblatt mit den Warnhinweisen gilt als Zusatz zur produktspezifischen Betriebsanleitung und muß aus Sicherheitsgründen besonders beachtet werden.

GEFAHR

Diese elektrischen Maschinen bzw. Geräte sind Betriebsmittel zum Einsatz in industriellen Starkstromanlagen. Während des Betriebes haben diese Betriebsmittel gefährliche, spannungsführende blanke Teile, ggf. auch bewegte bzw. rotierende Teile. Sie könnten deshalb, z. B. bei unzulässigem Entfernen der erforderlichen Abdeckungen, bei unsachgemäßem Einsatz, falscher Bedienung oder unzureichender Wartung, schwerste gesundheitliche oder materielle Schäden verursachen.

Die für die Sicherheit der Anlage Verantwortlichen müssen deshalb gewährleisten, daß

- ***nur qualifizierte Personen mit Arbeiten an den Maschinen bzw. Geräten beauftragt werden,***
- ***diese Personen u. a. die mitgelieferten Betriebsanleitungen und übrigen Unterlagen der Produktdokumentation bei allen entsprechenden Arbeiten stets verfügbar haben und verpflichtet werden, diese Unterlagen konsequent zu beachten,***
- ***Arbeiten an den Maschinen bzw. Geräten oder in deren Nähe für nichtqualifizierte Personen untersagt werden.***

Qualifiziertes Personal sind Personen, die, auf Grund ihrer Ausbildung, Erfahrung und Unterweisung sowie ihrer Kenntnisse über einschlägige Normen, Bestimmungen, Unfallverhütungsvorschriften und Betriebsverhältnisse, von dem für die Sicherheit der Anlage Verantwortlichen berechtigt worden sind, die jeweils erforderlichen Tätigkeiten auszuführen und dabei mögliche Gefahren erkennen und vermeiden können (Definitionen für Fachkräfte siehe auch DIN VDE 0105 oder IEC 364).
Unter anderem sind auch Kenntnisse über Erste-Hilfe-Maßnahmen und die örtlichen Rettungseinrichtungen erforderlich.
Für Arbeiten an Starkstromanlagen ist das Verbot des Einsatzes nichtqualifizierter Personen z. B. in DIN VDE 0105 oder IEC 364 geregelt.

⚠ WARNUNG ***Es wird vorausgesetzt, daß die grundsätzlichen Planungsarbeiten der Anlage sowie alle Arbeiten zu Transport, Montage, Installation, Inbetriebsetzung, Wartung und Reparaturen von qualifiziertem Personal ausgeführt bzw. durch verantwortliche Fachkräfte kontrolliert werden.***

Hierbei sind insbesondere zu beachten:

- ***die technischen Daten und Angaben über die zulässige Verwendung (Montage-, Anschluß-, Umgebungs-***

ENGLISH

This information sheet with its warning is in addition to the operating instructions for the individual products and for safety reasons its contents must be adhered to.

DANGER

The electric machines and equipment are for use in industrial heavy current installations. During operating this equipment has bare parts which are live and dangerous and may also have moving or rotating parts. For this reason, unauthorized removal of the necessary covers, improper use, incorrect operation or insufficient maintenance could lead to severe personal injury or property damage.

Those responsible for the safety of the installation must therefore ensure that

- ***only qualified personnel are entrusted to work on the machines or equipment,***
- ***these persons always have at their disposal the operating instructions and other product documentation supplied when they do such work, and that they undertake to follow consistently any such instructions,***
- ***non-qualified personnel are not permitted to work on or near the machines or equipment.***

Qualified personnel are persons who, on account of their training, experience and instruction and their knowledge of relevant standards, specifications, accident prevention regulations and operating conditions, have been authorized by those responsible for the safety of the plant to carry out the necessary work and who can recognize and avoid possible dangers (see also IEC 364 for definitions of specialist personnel).

A knowledge of first aid is also required as is information about local rescue facilities.
The stipulation that only qualified personnel may work on heavy current installations is included for example in IEC 364.

⚠ WARNING ***It is assumed that basic planning work for the installation and all work concerning transport, assembly, commissioning, maintenance and repair is done by qualified personnel or checked by responsible skilled personnel.***

Particular note must be taken of the follwing:

- ***The technical data and information on permissible use (assembly conditions, connection conditions,***

© Siemens AG 1990

und Betriebsbedingungen), die u.a. im Katalog, den Auftragsunterlagen, der Betriebsanleitung, den Schildangaben und der übrigen Erzeugnisdokumentation enthalten sind,
- *die allgemeinen Errichtungs- und Sicherheitsvorschriften,*
- *die örtlichen, anlagespezifischen Bestimmungen und Erfordernisse,*
- *der fachgerechte Einsatz von Werkzeugen, Hebe- und Transporteinrichtungen,*
- *die Benutzung persönlicher Schutzausstattungen,*
- *Montagebedingungen für Geräte, die ggf. entsprechend IP00 (ohne Abdeckungen) ausgeliefert werden: Im Betrieb muß der erforderliche Berührungsschutz vorhanden bzw. eine gefährliche Annäherung verhindert sein.*

Die Betriebsanleitungen können aus Gründen der Übersichtlichkeit nicht alle Detailinformationen zu möglichen Bauvarianten enthalten und können insbesondere nicht jeden denkbaren Fall der Aufstellung, des Betriebes oder der Wartung berücksichtigen. Demgemäß sind in den Betriebsanleitungen im wesentlichen nur solche Hinweise enthalten, die bei bestimmungsgemäßer Verwendung der Maschinen oder Geräte in industriellen Einsatzbereichen für qualifiziertes Personal (siehe oben) erforderlich sind.

Falls im Sonderfall bei beabsichtigtem Einsatz der Maschinen oder Geräte in nicht industriellen Bereichen eventuell erhöhte Anforderungen gestellt werden (z. B. Berührungsschutz gegen Kinderfinger o. ä.), müssen diese Bedingungen bei der Montage durch zusätzliche Schutzmaßnahmen anlagenseitig gewährleistet werden.

Bei diesbezüglichen Unklarheiten, insbesondere bei fehlenden produktspezifischen Detail-Informationen, müssen die erforderlichen Klärungen über die zuständige SIEMENS-Vertriebsstelle herbeigeführt werden. Bitte hierzu grundsätzlich Maschinen- bzw. Geräte-Typbezeichnung und Fertigungsnummer angeben.

ES WIRD EMPFOHLEN, FÜR PLANUNGS-, MONTAGE-, INBETRIEBSETZUNGS- UND SERVICE-AUFGABEN DIE UNTERSTÜTZUNG UND DIENSTLEISTUNGEN DER ZUSTÄNDIGEN SIEMENS-SERVICEZENTREN IN ANSPRUCH ZU NEHMEN.

HINWEIS: Für allgemeine Arbeiten, z. B. zum Prüfen eingehender Lieferungen (Transportschäden), zum langfristigen Einlagern und Konservieren von Maschinen, zur Fundamentprüfung, zum Aufziehen von Kupplungen, Aufstellen und Ausrichten von Maschinen, Installationsmaßnahmen u.v.a., sind weitere Detail-Informationen in den SIEMENS-Montageschriften oder Arbeitsrichtlinien enthalten, die erforderlichenfalls über die Vertriebsstellen bezogen werden können.

⚠ **WARNUNG** ***Um Störungen vorzubeugen, ist es erforderlich, die vorgeschriebenen Wartungs-, Inspektions- und Revisionsmaßnahmen regelmäßig von routiniertem Service-Peronal durchführen zu lassen (siehe oben). Veränderungen gegenüber dem Normalbetrieb (höhere Leistungsaufnahme, Temperaturen oder Schwingungen, ungewöhnliche Geräusche oder Gerüche, Ansprechen der Überwachungseinrichtungen usw.) lassen erkennen, daß die Funktion beeinträchtigt ist. Zur Vermeidung von Störungen, die ihrerseits mittelbar oder unmittelbar schwere Personen- oder Sachschäden bewirken könnten, muß das zuständige Wartungspersonal dann umgehend verständigt werden.***

⚠ ***IM ZWEIFELSFALL DIE ENTSPRECHENDEN BETRIEBSMITTEL SOFORT ABSCHALTEN!***

HINWEIS: Es wird darauf hingewiesen, daß der Inhalt der Betriebsanleitungen und Produktdokumentationen nicht Teil einer früheren oder bestehenden Vereinbarung, Zusage oder eines Rechtsverhältnisses ist oder dieses abändern soll. Sämtliche Verpflichtungen von Siemens ergeben sich aus dem jeweiligen Kaufvertrag, der auch die vollständige und allein gültige Gewährleistungsregelung enthält. Diese vertraglichen Gewährleistungsbestimmungen werden durch die Ausführungen dieser Anleitungen und Dokumentationen weder erweitert noch beschränkt.

ambient and operating conditions), which are contained in the catalog, order documents, operating instructions, rating plate and other product documentation,
- ***The general erection and safety regulations,***
- ***The local, plant-specific specifications and requirements,***
- ***The proper use of tools, lifting gear and transport devices,***
- ***The use of personal protective gear.***
- ***Installation instructions for equipment which may be supplied to IP00 (without covers). In operation, this equipment must have the necessary shock protection fitted or access must be prevented which could result in danger.***

These instructions cannot claim to cover all details of possible equipment variations, nor in particular can they provide for every possible example of installation, operation or maintenance. This means that the instructions for machines or equipment for industrial applications normally include only the directions to be followed by qualified personal (see above) where the equipment is used for its defined purpose.

If in special cases it is intended to use the machines or equipment in non-industrial areas and therefore requirements may be more stringent, e.g. protection against contact by children fingers, ect., compliance with such requirements must be assured during installation by providing additional protective measures on site.

If there are any uncertainties in this respect, particularly in the event of missing product-related information, clarification must be obtained via the appropriate SIEMENS sales office. Please always indicate the machine or equipment type and serial number.

WE WOULD RECOMMEND ASKING FOR THE ASSISTANCE AND SERVICES OF THE COMPETENT SIEMENS SERVICE CENTRES FOR PLANNING, INSTALLATION, COMMISSIONING AND SERVICING TASKS.

NOTE: For general work such as checking of incomming deliveries (damage in transit), storing and preserving for prolonged periods of time, foundation testing, fitting of couplings, installation and alignment of machines, etc., further detailed information is given in the SIEMENS installation instructions which can be obtained from the sales offices.

⚠ **WARNING** ***The specified maintenance, inspection and overhaul measures must be carried out regularly by trained service personnel in order to avoid any interruptions or breakdowns (see above). Deviations from the normal performance (higher power input, higher temperatures or vibrations, unusual noises or odours, reactions by monitoring equipment, ect.) indicate that proper function of the unit is impaired. In order to avoid faults, which might directly or indirectly cause serious damage to property or injury to persons, the responsible maintenance personnel must be notified immediately***

⚠ ***IF IN DOUBT, SWITCH OFF THE EQUIPMENT IMMEDIATELY.***

NOTE: The contents of the operating instructions and product documentation shall not become part of or modify any prior or existing agreement, commitment or relationship. The Sales Contract contains the entire obligations of Siemens. The warranty contained in the contract between the parties is the sole warranty of Siemens. Any statements contained herein do not create new warranties or modify the existing warranty.

FRANÇAIS

La présente fiche d'information, qui comporte les marques d'avertissement, s'inscrit en complément à la documentation du produit et doit être respectée dans tous ses points pour des raisons de sécurité.

DANGER

Les machines et appareils électriques sont des matériels destinés à être utilisés dans des installations industrielles à courant fort. Ces matériels comportent des parties actives nues et éventuellement des pièces en mouvement ou en rotation susceptibles de constituer un danger en cours de fonctionnement. Ils pourraient par conséquent occasionner des lésions corporelles très graves ou des dommages matériels importants, par exemple en cas d'enlèvement intempestif des recouvrements nécessaires, en cas d'utilisation non appropriée, en cas de manoeuvre incorrecte ou en cas de carence au niveau de l'entretien.

Il incombe par conséquent aux responsables de la sécurité de l'installation de faire en sorte

- ***que seules des personnes qualifiées soient chargées de l'exécution de travaux sur les machines ou sur les appareils,***
- ***que pour l'exécution de tous les travaux correspondants, ces personnes disposent en permanence de la notice de mise en oeuvre livrée avec le produit et des autres éléments de la documentation du produit et qu'elles soient tenues de se conformer strictement à cette documentation, et***
- ***qu'il soit interdit aux personnes non qualifiées d'exécuter des travaux sur les machines ou appareils ou à leur voisinage.***

Par PERSONNEL QUALIFIE il faut entendre les personnes qui, au vu de leur formation, de leur expérience et de leur information ainsi que de leurs connaissances des normes et règlements applicables, des prescriptions de prévention d'accidents et des conditions d'exploitation, ont été habilitées par le responsable de la sécurité de l'installation à exécuter les tâches nécessaires, et qui soient en mesure de reconnaître des dangers éventuels et de les éviter (pour les définitions relatives à la compétence des personnes, voir aussi DIN VDE 0105 ou CEI 364).
Elles doivent aussi avoir des connaissances de secourisme ainsi que de connaissances des équipements de sauvetage se trouvant sur place.
L'interdiction de confier des travaux sur des installations à courant fort à des personnes non qualifiées est réglementée, par exemple dans DIN VDE 0105 ou CEI 364.

ATTENTION ***Les travaux d'études et d'ingénierie de l'installation ainsi que tous les travaux de transport, de manutention, de montage, d'installation, de mise en service, de maintenance et de réparation sont supposés être exécutés par des personnes qualifiées ou sous le contrôle de personnes compétentes responsables.***
Dans ce contexte, il a lieu de:

- ***tenir compte des caractéristiques techniques et des conditions d'utilisation (conditions de montage, de raccordement, d'environnement et de service) qui figurent entre autres au catalogue, dans la notice de mise en oeuvre, sur les plaquettes signalétiques et dans les autres éléments de la documentation du produit***
- ***se conformer aux règles générales d'établissements et de sécurité,***
- ***respecter les prescriptions et contraintes locales spécifiques à l'installation,***
- ***veiller à l'utilisation adéquate des outils ainsi que des équipements de levage et de manutention,***
- ***veiller à l'utilisation des équipements de protection des personnes,***

ESPAÑOL

Esta hoja informativa con indicaciones de peligro, es complementaria a las instrucciones de servicio específicas del producto y su contenido debe observarse especialmente por razones de seguridad.

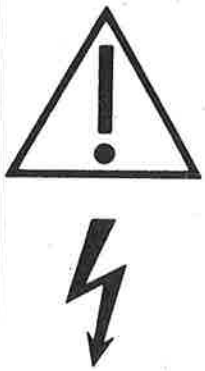

PELIGRO

Las máquinas y aparatos eléctricos forman parte de instalaciones industriales de energía eléctrica. Durante su servicio tienen algunas partes descubiertas sometidas a tensiones peligrosas, pudiendo haber otras sujetas a movimiento o rotación. Por este motivo, pueden dar origen siempre a graves daños personales o materiales si, por ejemplo, se eliminan indebidamente las cubiertas necesarias, se hace uso indebido de las mismas, se manejan erróneamente o no se practican en ellas las suficientes operaciones de mantenimiento.

Los responsables de la seguridad de la instalación tienen que garantizar que:

- ***solo se encarguen los trabajos a realizar en las máquinas y aparatos a personas calificadas***
- ***que dichas personas al realizar los correspondientes trabajos tengan siempre a su disposición y se comprometan a observar consecuentemente las instrucciones de servicio suministradas y la demás documentación especifica de los productos.***
- ***Se prohiba trabajar en las máquinas y aparatos o en sus proximidades a personas no calificadas.***

PERSONAL CALIFICADO son aquellas personas que por su formación, experiencia e instrucción así como por sus conocimientos sobre las normas, determinaciones, prescripciones sobre prevención de accidentes y sobre las condiciones del servicio correspondientes, están autorizadas por el responsable de la seguridad de la instalación a ejecutar las actividades necesarias, reconociendo y evitando los posibles peligros (sobre las definiciones de personal especializado consúltese DIN VDE 0105 o CEI 364).

Entre otros, hay que tener conocimiento sobre los primeros auxilios a prestar y sobre los equipos de salvamento locales.

En las normas DIN VDE 0105 o en CEI 364 se regula la prohibición de emplear personas no calificadas para trabajos en instalaciones de energía eléctrica.

PRECAUCION ***Se da por supuesto que los trabajos fundamentales de planificación de la instalación asi como todas las operaciones de transporte, montaje, instalación, puesta en servicio, mantenimiento y reparación corren a cargo de personal calificado y se realizan bajo el control del personal especializado responsable.***
Hay que observar especialmente:

- ***Los datos técnicos e indicaciones sobre el empleo admisible (condiciones de montaje, de conexión, del ambiente y del servicio), contenidas, entre otros, en el catálogo, en la documentación del pedido, en las instrucciones de servicio, en rótulos y en la demás documentación del producto.***
- ***Las prescripciones generales de instalación y seguridad.***
- ***Las determinaciones y condiciones exigidas específicas de la instalación y locales.***
- ***El empleo conveniente de herramientas y equipos de elevación y transporte.***
- ***El uso de los equipos de protección personal.***

– conditions de montage pour des appareils qui seront éventuellement mis à l'expedition en degré de protection IP00 (sans recouvrements): en service, la protection requise contre les contacts directs doit être assurée et une approche dangereuse doit être évitée.

Pour des raisons de clarté, la documentation ne contient pas toutes les informations de détail relatives aux variantes de configuration possibles ; elle ne peut pas non plus aborder toutes les situations susceptibles de se présenter lors de l'installation, de l'exploitation et de la maintenance. D'une façon générale, la documentation ne contient donc que des informations nécessaires au personnel qualifié (voir ci-dessus), lorsque les machines et appareils sont utilisés dans des applications industrielles, conformément à l'usage auquel il sont destinés.

Si, dans un cas spécial, il serait envisagé d'utiliser les machines ou appareils dans des application non industrielles où ils feraient éventuellement l'objet d'exigences plus sévères (par exemple, protection contre les contacts des doigts d'enfant avec les pièces sous tension ou les pièces en mouvement intérieures à l'enveloppe ou autres), ces conditions doivent être garanties sur l'installation, lors du montage, par des dispositions de sécurité additionnelles.

Au cas où ces points ne seraient pas suffisamment clairs, notamment en cas d'absence d'informations détaillées spécifiques au produit, il est indispensable de contacter l'agence SIEMENS la plus proche pour obtenir les renseignements correspondants. D'une manière générale, il est nécessaire de préciser à cet effet la désignation du type de la machine ou de l'appareil et le numéro de fabrication.

EN CE QUI CONCERNE LES TRAVAUX D'INGENIERIE, DE MONTAGE, DE MISE EN SERVICE ET DE MAINTENANCE, NOUS RECOMMANDONS DE RECOURIR A L'ASSISTANCE ET AUX PRESTATIONS DE SERVICE DES CENTRES SAV SIEMENS COMPETENTS.

NOTA: En ce qui concerne les travaux généraux, par exemple le contrôle des livraisons (constatation des dommages occasionnés en cours de transport), le stockage et la conservation à long terme de machines, le contrôle des fondations, le montage d'accouplements, la mise en place et l'alignement de machines, les travaux d'installation, etc., les instructions de montage SIEMENS, qui sont disponibles dans les agences SIEMENS, fournirons de plus amples renseignements.

⚠ **ATTENTION** ***Afin de prévenir des incidents, il est nécessaire de confier à du personnel d'entretien expérimenté le soin d'exécuter régulièrement les travaux de maintenance, d'inspection et de révision prescrits (voir plus haut). Les anomalies par rapport au fonctionnement normal (puissances absorbées, températures ou vibrations plus élevées, bruits ou odeurs inhabituels, entrée en action des équipements de surveillance, etc.) laissent supposer que le fonctionnement est compromis. Afin d'éviter des incidents susceptibles d'occasionner directement ou indirectement des lésions corporelles ou des dommages matériels, le personnel compétent pour la maintenance doit être averti immédiatement.***

⚠ ***EN CAS DE DOUTE, PROCEDER IMMEDIATEMENT A LA MISE A L'ARRET DES MATERIELS CORRESPONDANTS!***

ATTENTION: Nous attirons l'attention sur le fait que le contenu de de la documentation du produit ne fait pas partie d'un accord, d'une promesse ou d'un rapport juridique intérieurs ou en vigueur; elle n'a pas non plus pour objet d'y porter amendement. Toutes les obligations de SIEMENS découlent du marché conclu, qui stipule aussi les clauses de garantie complètes et valables à titre exclusif. Les présentes instructions et documentations ne sauront ni étendre ni restreindre les clauses de garantie contractuelles.

– Condiciones de montaje para los aparatos que pudieran haberse suministrado con el grado de protección IP00 (sin envolventes): Durante el servicio tiene que existir la protección necesaria contra contactos casuales o impedirse la aproximación peligrosa.

Para mayor claridad, las instrucciones de servicio no incluyen todas las informaciones detalladas de las variantes constructivas posibles y, especialmente, no pueden considerar todos los casos imaginables de colocación, de servicio o de mantenimiento. Por este motivo, las instrucciones de servicio incluyen en esencia solo aquellas indicaciones que el personal calificado (véase más arriba) necesita si las máquinas o aparatos se utilizan para el fin industrial a que están destinados.

Si, en casos especiales se pretende utilizar las máquinas o aparatos fuera del ámbito industrial y hubiera que cumplir condiciones más severas (por ejemplo, protección contra contactos con los dedos de los niños o similares) estas condiciones tendrán que quedar garantizadas por parte del cliente, adicionando medidas de protección durante el montaje.

Si hubiese dudas al respecto, especialmente si faltasen detalles informativos específicos del producto, habria que establecer las aclaraciones necesarias a través de la oficina de SIEMENS competente. Se ruega fundamentalmente que, se indiquen la denominación del tipo de las máquinas o aparatos, así como su número de fabricación.

AL EFECTUAR LABORES DE PLANIFICACION, MONTAJE, PUESTA EN MARCHA Y SERVICIO SE RECOMIENDA HACER USO DE LA ASISTENCIA Y COLABORACION DE LOS CENTROS DE SERVICIO COMPETENTES DE SIEMENS.

INDICACION: Los impresos SIEMENS de montaje, que en caso necesario pueden adquirirse en las delegaciones correspondientes, contienen otras informaciones detalladas para los trabajos generales, por ejemplo, comprobación de los suministros recibidos (daños de transporte), almacenamiento prolongado y conservación de máquinas, comprobación de cimentaciones, calado de acoplamientos, emplazamiento y alineación de máquinas, operaciones de instalación y otras tareas diversas.

⚠ **PRECAUCION** ***Para prevenir perturbaciones es necesario que el personal de servicio experimentado (véase más arriba) efectúe regularmente las operaciones prescritas de mantenimiento, inspección y revisión. Las alteraciones respecto al servicio normal (mayor consumo, incremento de temperaturas o de vibraciones, ruidos u olores no habituales, actuación de los equipos de vigilancia, etc.), dan a conocer que el funcionamiento está dificultado. Para evitar perturbaciones que, a su vez, pueden motivar directa o indirectamente graves daños personales o materiales, hay que avisar inmediatamente al personal de mantenimiento competente.***

⚠ ***EN CASOS DE DUDA, DESCONECTAR INMEDIATAMENTE LOS COMPONENTES AFECTADOS.***

INDICACION: Se hace notar que el contenido de las instrucciones de servicio y de las documentaciones de los productos no son parte componente de convenios, concesiones o relaciones legales pasadas o existentes, ni pretenden modificarlas. Todos los compromisos adquiridos por Siemens resultan del correspondiente contrato de compraventa el cual contiene la regulación completa y única válida del compromiso de garantía. Las determinaciones contractuales sobre la garantía no quedan ampliadas ni limitadas por el contenido de estas instrucciones y documentaciones.

ITALIANO

Il presente foglio informativo con gli avvisi di allarme vale come supplemento aggiuntivo alle istuzioni specifiche per l'uso di ogni apparecchiatura e, per motivi di sicurezza, deve venire attentamente rispettato.

PERICOLO

I macchinari e le apparecchiature elettriche sono strumenti impiegati in impianti industriali sottoposti ad alta tensione. Durante il funzionamento tali dispositivi possiedono parti pericolose, sia perché poste sotto tensione e non isolate, sia perche' in moto, lineare o rotatorio. Esse quindi sono in grado di causare gravissimi danni a persone o cose, se, ad esempio, le protezioni necessarie vengono rimosse, in caso di utilizzo non adeguato, di servizio non corretto o di non sufficiente manutenzione.

Per questo motivo i responsabili per la sicurezza dell'impianto devono garantire che:

- ***ai macchinari od alle apparechiature elettriche vengano assegnate solo persone qualificate***
- ***tali persone possano non solo sempre disporre presso tutte le relative postazioni di lavoro delle istruzioni per l'uso originali e di ulteriore documentazione sul prodotto, ma anche che ne osservino conseguentemente i contenuti***
- ***le lavorazioni ai macchinari e/o apparecchi o nelle vicinanze di essi vengano interdetti a personale non qualificato.***

Per personale qualificato si intendono quelle persone che, per la loro formazione, esperienza e istruzione, nonché le conoscenze delle relative norme, prescrizioni, provvedimenti per la prevenzione degli incidenti e sulle condizioni di servizio, sono stati autorizzati dal responsabile della sicurezza dell'impianto ad eseguire qualsiasi necessaria attività ed in questa essere in grado di riconoscere ed evitare ogni possibile pericolo. (Definizione per il personale tecnico, vedi anche VDE 0105 o IEC 364).
Fra l'altro si richiedono anche nozioni di pronto soccorso e sulle misure di salvataggio in loco.
Per lavorazioni in impianti ad alta tensione, il divieto di impiego di personale non qualificato e'regolamentato, ad esempio, nelle norme DIN VDE 0105 o IEC 364.

⚠ ATTENZIONE ***Viene richiesto che, i fondamentali lavori di disposizione dell'impianto, come pure trasporto, montaggio, installazione, messa in servizio, manutenzione e riparazioni vengano eseguiti da personale qualificato e controllati dal personale tecnico responsabile.***
A questo riguardo occorre in particolar modo osservare:

- ***dati tecnici e specifiche sull'utilizzo consentito (condizioni di montaggio, collegamento, ambientali e di servizio), che sono fra l'altro contenute nel catalogo, nei dati di progetto, nel manuale di servizio, nei dati di targa ed in ulteriori documentazioni sul prodotto***
- ***generali prescrizioni di costruzione e sicurezza***
- ***provvedimenti e richieste locali, specifiche dell'impianto***
- ***idonee modalita' di impiego di utensili, sollevatori e trasportatori***
- ***l'impiego delle personali dotazioni protettive***
- ***modalità di montaggio di apparecchiature, che vengono consegnate in conformita' con IP00 (senza coperture): durante il servizio deve essere disponibile la necessaria protezione da contatto e deve essere interdetto un accostamento pericoloso.***

SVENSKA

Detta informationsblad med varningsanvisningar gäller som tillägg till den produktspecifika driftsinstruktionen och måste ges speciell uppmärksamhet av säkerhetsskäl.

FARA

De elektriska maskinerna och apparaterna är utrustning för användning i industriella starkströmsanläggningar. Under driften har dessa utrustningenheter farliga, spänningsförande blanka detaljer, i vissa fall även rörliga eller roterade delar. De kan därför förorsaka allvarliga personeller materialskador, t.ex. om erforderliga beröringsskydd avlägsnas i strid mot gällande bestämmelser, vid osakkunnig användning, felaktig manövrering eller otillräckligt underhåll.

De som ansvarar för anläggningen måste därför säkerställa att:

- ***enbart kvalificerad personal tillåts arbeta med maskinerna och utrustningsenheterna.***
- ***dessa personer ständigt har tillgång till medföljande driftinstruktioner, och övrig produktdokumentation vid allt arbete på utrustningen och åläggs att i varje detalj följa anvisningarna i denna dokumentation.***
- ***okvalificerad personal ej tillåts arbeta med maskinerna och apparaterna, eller i deras närhet.***

Kvalificerad personal är personer som på grundval av utbildning, erfarenhet eller instruktioner samt kunskap rörande tillämpliga normer, bestämmelser, olycksfallsföreskrifter och driftsförhållanden har bemyndigats av säkerhetsansvarig chef att utföra erforderliga arbetsuppgifter och därvid kan uppfatta och undvika möjliga risker (definition av fackpersonal se även DIN VDE 0105 elleer IEC 364).

Bland annat erfordras även kännedom rörande första hjälpen och om lokala räddningsanordningar.
För arbetet på starkströmsanläggningar regleras förbudet rörande användning av okvalificerad personal t.ex. i DIN VDE 0105 eller IEC 364.

⚠ VARNING ***Det förutsätts att principiellt planeringsrbete rörande systemet samt alla arbeten med transport, installation, idrifttagning, underhåll och reparation utförs av kvalificerad personal eller kontrolleras av ansvarig fackpersonal.***

Därvid måste man framför allt ge akt på:

- ***tekniska data och uppgifter rörande tillåten användning (monterings-, anslutnings-, miljö- och driftsvillkor), som bl.a. finns i katalogen, orderhandlingarna, driftsinstruktionen, på skyltar och övrig produktdokumentation;***
- ***de allmänna installations- och säkerhetsföreskrifterna;***
- ***lokala, anläggningsspecifika bestämmelser och krav;***
- ***fackmannamässig användning av verktyg, lyft- och transportdon;***
- ***användning av personlig skyddsutrustning;***
- ***monteringvillkor för apparater som i vissa fall levereras enl. IP00 (i öppet tillstånd): vid driften måste det finnas erforderliga beröringsskydd eller anordningar som förhindrar personer från att komma i närheten av utrustningen.***

Le istruzioni sul funzionamento delle apparecchiature non possono, pena una mancata globalità, contenere nel dettaglio tutte le informazioni sulle possibili varianti costruttive, ne' tanto meno ogni pensabile caso nel montaggio, nel servizio o nella manutenzione. Nei manuate solamente le istruzioni necessarie al personale qualificato per un adeguato utilizzo di macchinari o di apparecchiature in aree di lavoro industriali.

Se in casi speciali di installazioni di macchinari od apparecchia-ture non in aree industriali, vengano eventualmente poste ulteriori condizioni (es.: protezione da contatto per le dita di bambini, etc), tali condizioni devono venire garantite dall' impianto in fase di montaggio attraverso misure di protezione aggiuntive.

In mancanza di chiarezza, specialmente con mancanti informazioni dettagliate sul particolare prodotto, occorre provvedere al chiarimento necessario attraverso le strutture commerciali SIEMENS competenti. Si prega di indicare chiaramente il codice del macchinario o della apparecchiatura ed il relativo numero di produzione.

PER IL PROGETTO, IL MONTAGGIO, LA MESSA IN SERVIZIO ED IL SERVICE, SI CONSIGLIA DI RICHIEDERE IL SUPPORTO E L'ASSISTENZA DEI CENTRI SIEMENS COMPETENTI.

NOTA: Per attività generali, come, ad esempio, l'accurato test del materiale consegnato (danni da trasporto), l'immagazzinaggio a lungo termine e la conservazione di macchinari, le prove di base, la stesura dei collegamenti, la messa in opera e la messa a punto dei macchinari, le norme di installazione e molti altri, sono disponibili ulteriori informazioni, contenute nelle pubblicazioni SIEMENS per il montaggio e reperibili su richiesta presso le rispettive agenzie.

⚠ **ATTENZIONE** ***Al fine di evitare guasti, è necessario fare eseguire regolarmente dal personale di servizio addestrato le prescritte operazioni di manutenzione, ispezione e revisione (vedi sopra). Variazioni rispetto al normale funzionamento (assorbimento di potenza maggiorato, temperature, vibrazioni, rumori, etc. o segnalazioni da parte dell'impianto di sicurezza) fanno prevedere che il funzionamento sia non corretto. Per impedire guasti, che possono recare direttamente od indirettamente gravi danni a persone o cose, il personale addetto alla manutenzione deve venire tempestivamente informato.***

⚠ ***IN CASO DI DUBBIO DISATTIVARE IMMEDIATAMENTE GLI UTENSILI SOSPETTI***

NOTA: Si fa inoltre presente, che il contenuto del manuale e delle documentazioni relative al prodotto non fa parte di accordi, impegni o rapporti giuridici, né precedenti né attuali e che tale situazione non può cambiare. Tali impegni da parte di SIEMENS risultano nel contratto di vendita corrispondente, contenente anche certificati di garanzia completi ed autonomamente validi. Tali certificati di garanzia regolati da contratto non vengono né ampliati né limitati dalla stesura del presente manuale.

För överskådlighetens skull kan driftsinstruktionerna inte alltid innehålla all detaljinformation rörande möjliga konstruktionsvarianter, och kan framför allt inte ta hänsyn till alla tänkbara slag av installation, drift och underhåll. Sålunda innehåller driftsinstruktionerna i allmänhet bara sådana anvisningar som krävs för kvalificerad personal (se ovan) i samband med korrekt användning av maskiner eller apparater i industriella sammanhang.

Om av maskiner eller apparater enstaka fall används utanför industriområden och detta medför skärpta krav (t.ex. beröringsskydd för barn), så måste dessa villkor säkerställas genom montering av extra skyddsanordningar.

Ta kontakt med närmaste SIEMENS-kontor vid oklarheter i detta avseende, framför allt avsaknad av produktspecifik detaljinformation. Ange därvid typbeteckning och tillverkningsnummer för berörda maskiner eller apparater.

VID PLANERING, MONTERING, IDRIFTTAGNING OCH SERVICEARBETE ÄR DET LÄMPLIGT ATT UTNYTTJA DEN HJÄLP OCH DE TJÄNSTER SOM UTNYTTJA DEN HJÄLP OCH DE TJÄNSTER SOM KAN ERHÅLLAS FRÅN SIEMENS SERVICECENTRA.

OBS: För allmänna arbeten, t.ex. kontroll av mottagna leveranser (transportskador), långtidslagring och konservering av maskiner, kontroll av fundament, pådragning av kopplingar, uppställning och riktning av maskiner, installationsåtgärder etc. gäller ytterligare detaljinformation, som finns i SIEMENS monteringsanvisningar, som kan erhållas från försäljningskontoret.

⚠ **VARNING** ***För att förebygga störningar måste föreskrivna underhålls-, inspektions- och revisionsåtgärder regelbundet utföras av erfaren servicepersonal. Vid iakttagelser som ej stämmer överens med normal drift (t.ex. högre effektförbrukning, förhöjd temperaturer, vibrationer, ovanliga ljud etc., eller när skyddsfunktioner löser ut) finns det anledning att misstänka att även funktionen påverkats. För att undvika störningar, som i sin tur man medföra allvarligaperson-eller materialskador, måste då ansvarig servicepersonal kallas in utan dröjsmål.***

⚠ ***KOPPLA OMEDELBART IFRÅN UTRUSTNINGEN VID VARJE MISSTANKE.***

OBS: Innehållet i driftsinstruktioner och annan produktdokumentation skall inte anses ingå som en del av tidigare eller gällande överenskommelse, utfästelse eller rättsförhållande och ej heller ändrar detta. Alla förpliktelser från Siemens sida grundas på det berörda köpeavtalet, som också innehåller fullständiga och oinskränkta uppgifter rörande garantiåtaganden. Dessa avtalsenliga bestämmelser rörande garantiåtaganden varken kompletteras eller inskränks av framställningarna i driftsinstruktioner och annan dokumentation.

Herausgegeben vom / Issued by
Bereich Antriebs-, Schalt- und Installationstechnik / Drives and Standard Products Group
Elektromotorenwerk Bad Neustadt a. d. Saale (EWN)

Änderungen vorbehalten
Sous réserve de modifications
Con riserva di eventuali modifiche

Subject to change without prior notice
Sujeto a modificaciones
Förbehåll ändringar

Siemens Aktiengesellschaft

EWN-Bestell-Nr./Order No.: 610.42356/21
Bestell-Ort: EWN

Dynamo tachymétrique (voir 610.41174/21)

La dynamo tachymétrique est pratiquement exempte d'entretien. Elle peut être démontée sans risque de désaimantation. Lorsque les balais en charbon sont usés jusqu'à une longueur résiduelle de 7 mm environ, remplacer le jeu complet par des balais du même type et de même qualité que ceux d'origine, et les roder.

Dépose du rotor (8.84): dévisser la vis de fixation M6 (8.85); engager à fond la pige en acier (4,8×30) dans l'arbre moteur (pour protéger le centrage du bout d'arbre). Visser une vis M8 (longueur minimale 30 mm) à la place de la vis de fixation, pour dégager le rotor de son siège conique sur l'arbre moteur (conicité 10 %). Empêcher le rotor de tourner en le retenant par le six pans (cote sur plats 19) de son moyeu. Lors du montage du rotor, serrer la vis de fixation M6 (8.85) avec un couple de 10 Nm. Excentricité maximale du collecteur 0,04 mm.

Frein

Le frein de retenue à aimants permanents se serre en absence de courant. Il se desserre lorsqu'on applique une tension continue de 24 V, ±10 %. Cette tension doit se trouver à l'intérieur de ces tolérances, sinon la sécurité de fonctionnement ne serait plus assurée. Lorsque le moteur est sous tension, le frein doit toujours être excité, c'est-à-dire desserré. Si l'on coupe l'alimentation du frein (désexcitation) ou en cas de panne de courant, l'aimant permanent attire le disque d'armature (2.20), ce qui bloque l'arbre moteur. Voir la figure 1 pour le raccordement du frein.
Ce dernier est raccordé au bloc de jonction bipolaire (BR, BR2) fixé au stator (8.86) de la dynamo tachymétrique.

Démontage du frein

Important: lors du débranchement de l'enroulement du frein, le disque d'armature (2.20) s'attire immédiatement. S'il faut faire tourner le rotor (3.00) ou le disque d'armature (2.20) ou s'il faut retirer le flasque-palier (1.40) et la culasse magnétique (2.10) du rotor, il y a lieu de mettre l'enroulement du frein sous tension. Toute séparation forcée du disque d'armature (2.20) et de la culasse magnétique (2.10) provoquerait la déformation de la membrane métallique montée sur le disque d'armature.

a) Desserrer les vis à six pans creux (1.26).
b) Desserrer les écrous (1.37) et retirer le flasque-palier côté A (1.40).
c) Mettre le frein sous tension; visser les tiges filetées du dispositif d'extraction dans les trous taraudés de la culasse magnétique du frein (2.10). Appliquer le dispositif d'extraction sur le bout d'arbre et serrer la vis. Retirer de 20 mm environ la culasse magnétique (2.10) avec le roulement.
d) Débrancher les conducteurs d'alimentation du frein et les sortir du carter. Retirer entièrement la culasse magnétique (2.10). Ne pas réutiliser le roulement extrait.
e) Au besoin, il est possible de remplacer le disque d'armature (2.20); desserrer à cet effet les vis (2.22) bloquées au loctite et retirer le disque.

Montage du frein

a) Fixer le disque d'armature (2.20) au disque de freinage (2.30) à l'aide des vis (2.22). Bloquer les vis au loctite type 0572 ou fluid D.
b) Mettre la culasse magnétique sous tension et l'appliquer contre le disque d'armature. Couper la tension.
c) Emmancher à chaud le roulement (1.60) sur l'arbre.
d) Réalimenter la culasse magnétique et précentrer son bord de centrage par rapport à la bague extérieure du roulement, afin d'éviter toute déformation lors de l'emmanchement du flasque-palier côté A.
e) Faire passer les conducteurs d'alimentation du frein par le trou « N » et les raccorder, dans la boîte à bornes, aux bornes BR et BR2 (figure 1). Approcher du carter le flasque-palier côté B. Mettre le frein sous tension. Veiller à ce que le trou du pôle nord (N) du carter ne soit obstrué par aucun compound et à ce qu'il se trouve en haut; s'il y a lieu, percer la masse compound avec un tournevis.

f) Visser une vis sans tête à titre d'auxiliaire dans l'un des trous taraudés de la culasse magnétique (2.10). Emmancher le flasque-palier côté A (1.40) sur le bout d'arbre et la vis sans tête. Fixer le flasque-palier au carter à l'aide des écrous (1.37) et des rondelles élastiques (1.38).
g) Fixer la culasse magnétique (2.10) au flasque-palier côté A au moyen des vis à six pans creux (1.28). Couple de serrage 2,9 Nm.

h) Ne pas donner de coups demarteau sur le bout d'arbre.

Pose ultérieure du frein

Il est possible de monter ultérieurement le frein sur le moteur. Demander à l'usine les éléments du frein et les schémas de montage.

Generador tacométrico (véase 610.41174/21)

El generador tacométrico no requiere, prácticamente, ningún mantenimiento. Puede ser desmontado sin peligro de perder su imantación. Las escobillas de carbón tienen que ser sustituidas por juegos de la misma ejecución y calidad que las suministradas por la fábrica, en cuanto se hayan reducido por desgaste a unos 7 mm. Esmerilar las escobillas nuevas.
Desmontaje del rotor (8.84): Desatornillar el tornillo de fijación M6 (8.85). Insertar hasta el tope en el árbol del motor una espiga de acero (4,8×30) para proteger el centraje del extremo del árbol. En lugar del tornillo de fijación, atornillar un tornillo M8 (longitud mínima: 30 mm), extrayendo así el rotor de su asiento cónico sobre el árbol del motor (conicidad: 1:10). Para que el rotor no pueda girar, retenerlo por la pieza hexagonal de su cubo (ancho de la llave: 19). Al volver a montar el rotor, apretar el tornillo M6 (8.85) con 10 Nm. Excentricidad máxima del colector: 0,04 mm.

Freno

El freno de retención, de imanes permanentes, funciona según el principio de la corriente de reposo. Se abre, aplicando una tensión continua de 24 V ±10 %. La tensión debe quedar dentro de estas tolerancias para no poner en peligro la seguridad de servicio. Siempre que el motor esté conectado, el freno deberá estar excitado, es decir, suelto. Al desconectar el freno (desexcitar) o al fallar la corriente, el disco de la armadura (2.20) és atraído, frenando así el árbol del motor. Respecto a la conexión del freno véase la fig. 1.

El freno se conecta al borne en serie, bipolar (BR, BR2), que se encuentra fijado al estator (8.86) del generador tacométrico.

Desmontaje del freno

Atención: Al desconectar el devanado del freno, el disco de la armadura (2.20) será atraído inmediatamente. Si fuese necesario hacer girar el rotor (3.00) o el disco (2.20) o si hubiese que extraer del rotor el escudo porta-cojinetes (1.40) junto con el imán, habrá que aplicar tensión al devanado del freno. Si el disco (2.20) se separa a la fuerza del imán (2.10), se deformará el resorte de membrana del disco.

a) Aflojar el tornillo (1.26) de hexágono interior.
b) Aflojar las tuercas (1.37) y quitar el escudo porta-cojinetes (1.40) del lado A.
c) Conectar el freno a la red y atornillar los pernos del dispositivo de desmontaje en los orificios roscados del imán (2.10). Hacer encajar este dispositivo sobre el árbol y apretarlo. Extraer la parte fija del imán (2.10) unos 20 mm, junto con el cojinete.

d) Soltar los conductores y sacarlos de la carcasa. Extraer ahora totalmente la pieza (2.10). El cojinete extraído no se debe volver a emplear.
e) Si fuese necesario, se puede recambiar ahora el disco (2.20). Aflojar los tornillos (2.22), que están fijados con "Loctite", y extraer el disco.

Montaje del freno

a) Fijar el disco (2.20) con los tornillos (2.22) a la parte rotatoria del freno (2.30). Fijar los tornillos con "loctite", tipo 0572 o fluid D.
b) Aplicar una tensión al imán y acercarlo al disco de la armadura; a continuación, volver a quitar la tensión.
c) Calar en caliente sobre el árbol el cojinete (1.60).
d) Volver a excitar eléctricamente el imán y centrar previamente el borde de centraje de éste respecto al anillo exterior del cojinete, para evitar que el escudo porta-cojinetes del lado A se pueda ladear al montarlo.
e) Introducir los conductores del freno por el orificio "N" y conectarlos, en la caja de bornes, a los bornes BR y BR2 (ver fig. 1). Acercar el escudo porta-cojinetes del lado B a la carcasa y poner el freno bajo tensión. Prestar atención a que el orificio "N", hecho en la carcasa para el polo norte, quede en la parte superior y que no quede obturado por la masilla compound; caso dado, limpiarlo con un destornillador, empujando la masilla hacia afuera.
f) Para facilitar el montaje, atornillar un tornillo en la parte fija del freno (2.10) y meter el escudo porta-cojinetes (1.40) del lado A sobre el extremo del árbol y dicho tornillo. Fijar a la carcasa el escudo porta-cojinetes con las tuercas (1.37) y las arandelas elásticas (1.38).
g) Fijar la parte fija del freno (2.10) al escudo porta-cojinetes del lado A con los tornillos de hexágono interior (1.28). Momento de apriete: 2,9 Nm.
h) No dar golpas de martillo sobre el extremo de árbol.

Montaje posterior de un freno

El freno puede ser montado también posteriormente en el motor. Pedir a la fábrica las piezas necesarias y los planos y descripciones pertinentes.

Descrizione

Campo d'impiego

I motori sono raffreddati a ventilazione naturale (sistema di protezione IP 54). Essi possono essere installati in ambienti al coperto dove le condizioni climatiche siano normali. Per il refrigerante è ammessa una temperatura massima di 40 °C.
I motori sono equilibrati dinamicamente con chiavetta piena. La calettatura e l'estrazione di elementi di azionamento (p.e. puleggia, disco di accoppiamento, ruota dentata) e di cuscinetti a rotolamento, vanno effettuate esclusivamente con gli appositi attrezzi, utilizzando la filettatura nell'estremità d'albero.

Installazione

L'installazione va effettuata in posizione tale da garantire una sufficiente dissipazione del calore per mezzo di irradiazione e di convezione naturale. I motori possono presentare temperature superficiali elevate. Se necessario si adottino accorgimenti protettivi contro contatti accidentali.
Le aperture d'ispezione sullo scudo di supporto lato opposto all'azionamento (6.20) devono rimanere accessibili per operazioni di manutenzione.

Collegamenti (v. fig. 1)

Attenzione! Qualunque lavoro di collegamento o di manutenzione va eseguito solo dopo aver tolto la tensione all'impianto! Se il rotore viene girato, si forma una tensione sia ai morsetti del motore sia a quelli della dinamo tachimetrica a causa dell'eccitazione dovuta ai magneti permanenti.
Allacciamento del motore:
La tensione rotorica deve coincidere con il valore indicato dalla targa dei dati. Ai morsetti all'interno della morsettiera fissare i conduttori di alimentazione, sufficientemente dimensionati, e al morsetto ⏚ collegare il conduttore di protezione. Provvedere alla ritenzione del cavo di alimentazione, contro trazioni.
Collegamento della dinamo tachimetrica: Attenersi alle indicazioni della targa dei dati e dello schema. Il collegamento vien fatto per mezzo delle boccole ad innesto sui portaspazzole. Le boccole di collegamento vanno schiacciate con apposito utensile oppure saldate. Assicurare il cavo contro trazioni.

Manutenzione

Prima di smontare il motore (per es. quando vengono sostituiti i cuscinetti) contrassegnare la posizione originaria degli scudi di supporto rispetto alla custodia.

Commutatore o portaspazzole

Ad intervalli di tempo regolari, attraverso l'apertura del portaspazzole a faretra (dopo aver tolto le spazzole), ispezionare il commutatore. Per un'ispezione più approfondita è necessario smontare lo scudo di supporto. Se rigature o punti di bruciatura sulla superficie del commutatore non possono esser tolte con tela smeriglio, il commutatore dovrà venir tornito (l'isolamento in mica tra le lamelle del commutatore va fresato e smussato accuratamente).
Sostituzione delle spazzole:
I motori sono muniti di portaspazzole di tipo a faretra. Le spazzole devono essere revisionate dopo circa 1000 ore di marcia del motore, dopo aver svitato la cappa 7.13. Lunghezza normale delle spazzole: 25 mm. E' ammessa un'usura fino a 10 mm, poi vanno sostituite. Impiegare solamente la stessa qualità di spazzole già adottata originariamente dalla fabbrica.
E' consigliabile procedere alla pulizia della macchina ad intervalli di tempo adeguati, badando in particolare a togliere ogni eventuale deposito di polvere di carbone.
Gli incavi di protezione per le faretre delle spazzole nello scudo di supporto lato opposto all'azionamento devono essere tenuti particolarmente puliti. Dopo ogni ricambio delle spazzole pulire accuratamente l'incavo con aria compressa secca, prima di applicare la guarnizione (7.14).

Sostituzione dei cuscinetti

I motori sono muniti di cuscinetti a lubrificazione permanente.

Attenzione! I cuscinetti sul lato azionamento e sul lato opposto hanno grandezze differenti. Vengono impiegati cuscinetti 2RS-C3. Le rondelle di guarnizione dei cuscinetti devono essere di materiale resistente alle alte temperature (fino a 180 °C). Quando si effettua la manutenzione del commutatore, si dovranno sostituire anche i cuscinetti.

Il vano per il grasso va riempito per il 35 %. Qualità di grasso: grasso komplex al litio, che abbia superata la prova B della norma DIN 51806, p.e. UNIREX N3 (Esso).

Beskrivning

Användning

Motorerna är självventilerade (skyddsform IP 54). De kan uppställas i övertäckta rum med normala klimatiska förhållanden. Tillåten kylmedelstemperatur högst 40 °C.

Motorerna är dynamiskt utbalanserade med full passkil. Montering och demontering av drivningselement (t.ex. remskiva, kopplingsskiva, kugghjul) och rullager skall utföras med en därför avsedd anordning. Härvid användes gängan i axeländen.

Montering

Monteringen måste genomföras så, att tillräckligt bortförande av förlustvärme garanteras genom strålning och naturlig konvektion. På motorernas yta kan höga temperaturer uppträda. Vid behov användes beröringsskydd.

Betjäningsöppningarna på B-sidans lagersköld (6.20) måste vara tillgängliga för servicearbeten.

Anslutning (se fig. 1)

OBS! Alla anslutnings- och underhållsarbeten får endast utföras i spänningslöst tillstånd! Genom permanentmagnetiseringen uppstår en spänning både på motorklämmorna och på takogeneratorklämmorna när rotorn vrids!

Motoranslutning: Rotorspänningen måste stämma överens med uppgiften på märkplåten. Tillräckligt dimensionerade anslutningsledningar anslutes till anslutningsklämmorna i uttagslådan, skyddsledaren anslutes till klämman märkt ⏚. Sörj för dragavlastning av anslutningskabeln.
Takogeneratoranslutning: Uppgifterna på märkplåten och i kopplingsschemat beaktas!
Anslutning sker med hjälp av de bifogade hylsorna vid borsthållarna. Hylsorna pressas fast med ett lämpligt verktyg eller lödas. Sörj för dragavlastning av anslutningsledningen.

Skötsel

Före demontage av motorn (t. ex. vid lagerbyte) markeras lagersköldarnas ursprungliga läge i förhållande till motorstommet.

Kommutator och kolborstar

Kontrollera kommutatorn i regelbundna tidsintervaller genom öppningen i borsthållaren (kolen borttagna). För noggrannare kontroll måste lagerskölden demonteras. Om repor eller brandställen på kommutatorns yta ej kan avlägsnas med fin smärgelduk, måste denna omsvarvas (glimmerisoleringen mellan kommutatorlamellerna urfräses noggrannt).

Byte av kolborstar: Motorerna har specialborsthållare. Borstarna kontrolleras efter ca. 1000 driftstimmar genom demontage av kåpan 7.13. Borstarnas normallängd 25 mm, tillåten förslitning till 10 mm, därefter bytes borstarna. Sätt endast in borstar av samma kvalitet som levererats från fabriken.

Det rekommenderas att rengöra maskinen i lämpliga tidsintervaller. Därvid skall särskilt eventuella koldammavlagringar avlägsnas.

Skyddsförsänkningarna för borstarna i lagerskölden på B-sidan måste hållas särskilt rena. Efter varje borstbyte blåses skyddsförsänkningarna noggrannt rena med torr tryckluft innan tätningen (7.14) inlägges.

Lagerbyte

Motorerna har lager med permanentsmörjning.

Observera! Lagren på A- och B-sidan är olika stora. Lagren är av typ 2RS-C3. Lagrens tätningsbrickor måste bestå av värmebeständigt material (upp till 180 °C). Vid kommutatorrevision bör även lagren bytas.

Fyllning av fettrummet ca. 35 %. Fettsort: Litium-komplex-fett som uppfyller löpprov B enl. DIN 51806, t. ex. UNIREX N3 (Esso).

Dinamo tachimetrica (vedere 610.41174/21)

La dinamo tachimetrica non ha praticamente bisogno di manutenzione. Può essere smontata senza pericolo che si smagnetizzi. Le spazzole usurate fino a 7 mm vanno sostituite al completo e poi smerigliate. S'impiegherà solamente la stessa qualità ed esecuzione di spazzole adottate dalla fabbrica.
Smontaggio del rotore (8.84):
Togliere la vite di fissaggio M6 (8.85). Inserire lo spinotto d'acciaio (4,8×30) nell'albero del motore fino al riscontro (per proteggere la zona di centraggio sull'estremità d'albero). Al posto della vite di fissaggio, avvitare una vite M8 (lunghezza minima 30 mm) e con essa staccare il rotore dalla sede conica sull'albero (conicità 1:10). Impedire la rotazione contemporanea del rotore tenendolo fermo all'estremità esagonale del mozzo (SW 19).
Nel montare il rotore, serrare la vite di fissaggio M6 (8.85) con una coppia di 10 Nm. Oscillazione massima radiale del commutatore 0,04 mm.

Freno

Il freno di ritenuta a magneti permanenti funziona secondo il principio della corrente di riposo. Si apre quando viene applicata una tensione continua di 24 V ±10 %. La tensione deve mantenersi entro i limiti di tolleranza indicati, altrimenti può venir compromessa la sicurezza di funzionamento. Quando il motore è inserito, il freno dev'essere sempre eccitato, cioè aperto. Quando si disinserisce il freno (diseccitazione) o se viene a mancare la corrente, il disco d'armatura (2.20) viene attratto dal magnete permanente e in tal modo trattiene l'albero del motore.
Il collegamento del freno è segnato in fig. 1.
Il freno è collegato al morsetto bipolare (BR, BR2) fissato allo statore (8.86) della dinamo tachimetrica.

Smontaggio del freno

Attenzione! Appena si disconnette l'avvolgimento del freno, l'armatura a disco (2.20) viene attratta immediatamente. Se si rende necessario ruotare il rotore (3.00) o l'armatura a disco (2.20), oppure se si deve estrarre dal rotore lo scudo di supporto (1.40) con il corpo magnetico, bisognerà metter sotto tensione l'avvolgimento del freno. Un distacco forzato del disco (2.20) dal corpo magnetico (2.10) porta ad una deformazione della molla a membrana sull'armatura a disco.

a) Svitare la vite ad esagono cavo (1.26).
b) Svitare il dado (1.37) ed estrarre lo scudo di supporto lato azionamento (1.40).
c) Mettere il freno sotto tensione, avvitare il bullone dell'estrattore nei fori filettati del corpo magnetico (2.10). Applicare l'estrattore sullo specchio dell'albero e serrare. Estrarre il corpo magnetico (2.10) con il cuscinetto, per circa 20 mm.
d) Disconnettere il cavetto che alimenta il freno ed estrarlo dalla carcassa. Asportare completamente il corpo magnetico. Il cuscinetto estratto non va più utilizzato.
e) Se necessario, l'armatura a disco (2.20) può essere sostituita: svitare le viti assicurate con loctite (2.22) e togliere l'armatura.

Rimontaggio del freno

a) Con le viti (2.22) fissare l'armatura a disco (2.20) al disco del freno (2.30). Assicurare le viti per mezzo di loctite di tipo 0572 o fluid D.
b) Mettere sotto tensione il corpo magnetico ed applicarlo all'armatura. Poi togliere la tensione.
c) Calettare a caldo il cuscinetto (1.60) sull'albero.
d) Centrare il bordo del corpo magnetico nuovamente eccitato, rispetto all'anello esterno del cuscinetto, per evitare che nell'operazione di calettatura lo scudo di supporto lato azionamento si trovi inclinato.
e) Infilare il cavetto di alimentazione del freno attraverso il foro "N" e collegarlo ai morsetti BR, BR2 della morsettiera (v. fig. 1). Spingere lo scudo di supporto lato opposto all'azionamento verso la carcassa, facendo attenzione che il foro del polo nord (N) della carcassa sia libero da materiale di tenuta e che si trovi in alto. Si stacchi un'eventuale otturazione materiale solidificato perforando con un cacciavite.
f) In uno dei fori filettati del corpo magnetico (2.10) infilare una vite prigioniera come aiuto per il montaggio. Poi infilare lo scudo di supporto lato azionamento (1.40) al di sopra dell'estremità d'albero e della vite prigioniera. Con dadi (1.37) e rondelle elastiche (1.38) fissare lo scudo di supporto alla carcassa.
g) Fissare il corpo magnetico (2.10) sullo scudo di supporto lato azionamento per mezzo della vite ad esagono interno (1.28). Coppia di serraggio 2,9 Nm.
h) Non battere col martello sull'estremità d'albero.

Montaggio successivo del freno

Il freno può esser montato anche in un secondo tempo. Si richiedano alla fabbrica i pezzi che formano il freno e la relativa documentazione.

Takogenerator (se 610.41174/21)

Takogeneratorn är praktiskt taget underhållsfri. Den kan demonteras utan fara för avmagnetisering. Kolborstarna utbytes satsvis i samma utförande och kvalitet som användes av fabriken efter nedslitning till ca. 7 mm och inslipas.

Demontering av rotorn (8.84): M6-fastsättningsskruven (8.85) skruvas ut. Stålstift (4,8×30) instickes till anslaget i motoraxeln (som skydd av centreringen i axeländen). I stället för fastsättningsskruven inskruvas en M8-skruv (minsta längd 30 mm), varigenom rotorn trycks av det koniska sätet på motoraxeln (kona 1:10). Rotorn förhindras att vrida sig genom fasthållning vid rotornavets sexkant (SW 19).
Vid montering av rotorn åtdrages M6-fastsättningsskruven (8.85) med 10 Nm. Max. rotationsavvikelse hos rotorn 0,04 mm.

Broms

Permanentmagnetbromsen arbetar enl. viloströmsprincipen. Den öppnar, då en likspänning på 24 V ±10 % pålägges. Spänningen måste ligga inom det angivna toleransområdet, då i annat fall driftssäkerheten riskeras. Vid inkopplad motor måste bromsen alltid vara magnetiserad, d.v.s. öppen. Vid frånkoppling av bromsen (avmagnetisering) eller vid strömbortfall drages ankarskivan (2.20) mot permanentmagneten, varigenom motoraxeln fasthålles. Bromsanslutning, se fig. 1.

Bromsanslutning sker över en tvåpolig klämma (BR, BR2), som är monterad på takogeneratorns stator (8.86).

Demontering av bromsen

OBS! Då bromslindningen lossas åtdrages ankarskivan (2.20) omedelbart. Om rotorn (3.00) eller ankarskivan (2.20) måste vridas, eller om lagerskölden (1.40) med magnetkroppen måste dragas av rotorn, måste bromslindningen sättas under spänning. Vid användning av våld deformeras membranfjädern på ankarskivan.

a) Sexkantsskruvarna (1.26) lossas.
b) Muttrarna (1.37) lossas och A-sidans lagersköld (1.40) avdrages.
c) Bromsen sättes under spänning och avdragningsdonets bultar inskruvas i de gängade hålen hos magnetkroppen (2.10). Avdragningsdonet sättes på axeln och åtdrages. Magnetkroppen (2.10) med lagret avdrages ca. 20 mm.
d) Bromsens tilledning lossas och utdrages ur kåpan. Magnetkroppen (2.10) avdrages helt. Avdraget lager användes ej åter.
e) Vid behov kan ankarskivan (2.20) utbytas: De med Loctite säkrade skruvarna (2.22) lossas och ankarskivan avtages.

Montering av bromsen

a) Ankarskivan (2.20) fästes på bromsskivan (2.30) med hjälp av skruvarna (2.22). Skruvarna säkras med loctite typ 0572 eller fluid D.
b) Magnetkroppen sättes under spänning och lägges mot ankarskivan. Därefter borttages spänningen.
c) Lagret (1.60) uppvärmes och sättes på axeln.
d) Centreringskanten hos den på nytt elektriskt magnetiserade magnetkroppen förcentreras till lagrets ytterring för att förhindra att A-sidans lagersköld vid påsättning kommer snett.
e) Bromsens tilledning stickes genom hålet "N" och anslutes till klämmorna BR, BR2 i anslutningslådan (se fig. 1). B-sidans lagersköld skjutes fram till kåpan. Bromsen sättes under spänning. Kontrollera, att nordpolshålet (N) i kåpan är fritt från fyllmassa och är riktat uppåt. Eventuell fyllmassa stötes ut med en skruvmejsel.
f) För att underlätta monteringen inskruvas en stiftskruv i ett av de gängade hålen hos magnetkroppen (2.10). Därefter skjutes A-sidans lagersköld (1.40) över axeländen och stiftskruven. Lagerskölden fastsättes på kåpan med hjälp av muttrarna (1.37) och fjäderbrickorna (1.38).
g) Magnetkroppen (2.10) fastsättes på A-sidans lagersköld med hjälp av sexkantsskruvarna (1.28). Åtdragningsmoment 2,9 Nm.
h) Slå ej med hammaren på axeländen.

Komplettering av broms

En inbyggnad av bromsen i motorn i efterhand är möjlig. Bromsdelar och monteringsanvisning beställes från fabrik.

Siemens Aktiengesellschaft

Bestell-Nr./Order No.: EWN 610.41166/21 b
Printed in the Federal Republic of Germany

Ersatzteile*

1.00 Lagerung, A-Seite
.40 Lagerschild
.53 Hülse
.60 Wälzlager
.80 Lagerdeckel innen (entfällt bei Bremseneinbau)

2.00 Bremse, komplett
.10 Magnetkörper
.20 Ankerscheibe und Bremsscheibe (2.30)

3.00 Läufer, komplett
.70 Kommutator

4.00 Ständergehäuse
.08 Bolzenschraube

5.00 Klemmenkasten, komplett
.11 Klemmenbrett, komplett
.66 Verschlußstopfen
.68 Stopfbuchsenverschraubung
.83 Dichtung zu 5.84 (nicht dargestellt)
.84 Klemmenkasten-Deckel

6.00 Lagerung, B-Seite
.10 Wälzlager
.11 Federscheibe
.12 Ausgleichsscheibe
.20 Lagerschild
.83 Dichtung zu 8.84 (nicht dargestellt)
.84 Deckel

7.00 Bürstenhalterung, komplett
.10 Bürstenköcher
.11 Kohlebürsten
.12 Verbindungskabel
.13 Bürstenhalterkappe
.14 Dichtung

8.00 Einbauten
.01 Abdeckkappe
.02 Dichtung
.04 Zwischenplatte
.06 Stecker
.08 Dichtung
.20 Drehmeldermeßgetriebe
.30 Impulsgeber
.31 Haube für Impulsgeber
.32 Dichtung
.34 Zwischenplatte
.80 Tachogenerator, komplett
.84 Tacholäufer
.86 Tachoständer
.90 Kohlebürste

Spare parts*

1.00 Drive end bearing assembly
.40 End shield
.53 Sleeve
.60 Rolling-contact bearing
.80 Internal bearing cover (not included if brake is fitted)

2.00 Brake, complete
.10 Magnet body
.20 Armature disc and brake disc (2.30)

3.00 Rotor, complete
.70 Commutator

4.00 Stator housing
.08 Screwed rod

5.00 Terminal box, complete
.11 Terminal board, complete
.66 Plug
.68 Compression gland
.83 Seal for 5.84 (not shown)
.84 Terminal box cover

6.00 Non-drive end bearing assembly
.10 Rolling-contact bearing
.11 Spring washer
.12 Shim
.20 End shield
.83 Seal for 8.84 (not shown)
.84 Cover

7.00 Brush holder gear, complete
.10 Brush cartridge
.11 Carbon brush
.12 Connecting cable
.13 Brush holder cap
.14 Seal

8.00 Internals
.01 Cover
.02 Seal
.04 Intermediate plate
.06 Plug
.08 Seal
.20 Synchro gear
.30 Impulse generator
.31 Hood for impulse generator
.32 Seal
.34 Intermediate plate
.80 Tachogenerator, complete
.84 Tachogenerator rotor
.86 Tachogenerator stator
.90 Carbon brush

Pièces de rechange*

1.00 Palier côté A
.40 Flasque-palier
.53 Douille-entretoise
.60 Roulement à billes
.80 Couvercle interne de palier (supprimé si le frein est monté)

2.00 Frein complet
.10 Culasse magnétique
.20 Disque d'armature et disque (2.30)

3.00 Rotor complet
.70 Collecteur

4.00 Carcasse statorique
.08 Tige filetée aux deux extrémités

5.00 Boîte à bornes complète
.11 Plaque à bornes complète
.66 Bouchon
.68 Raccord à presse-étoupe
.83 Joint pour 5.84 (non représenté)
.84 Couvercle de boîte à bornes

6.00 Palier côté B
.10 Roulement à billes
.11 Rondelle-ressort
.12 Rondelle-entretoise
.20 Flasque-palier
.83 Joint pour 8.84 (non représenté)
.84 Couvercle

7.00 Porte-balais complet
.10 Cage
.11 Balai en charbon
.12 Câble de raccordement
.13 Bouchon vissé
.14 Joint

8.00 Eléments incorporés
.01 Capot
.02 Joint
.04 Plaque intermédiaire
.06 Connecteur
.08 Joint
.20 Résolveur avec réducteur
.30 Impulseur
.31 Capot pour l'impulseur rotatif
.32 Joint
.34 Plaque intermédiaire
.80 Dynamo tachymétrique, complet
.84 Rotor de la dynamo tachymétrique
.86 Stator de la dynamo tachymétrique
.90 Balai en charbon

Piezas de repuesto*

1.00 Cojinete, lado A
.40 Escudo portacojinetes
.53 Casquillo
.60 Rodamiento
.80 Tapa interior del cojinete (se suprime si se monta el freno)

2.00 Freno completo
.10 Cuerpo de los imanes
.20 Disco de la armadura y disco del freno (2.30)

3.00 Rotor completo
.70 Colector

4.00 Carcasa del estator
.08 Perno roscado

5.00 Caja de bornes completa
.11 Regleta de bornes completa
.66 Tapón de cierre
.68 Atornilladura prensaestopas
.83 Junta para 5.84 (no representada)
.84 Tapa de la caja de bornes

6.00 Cojinete, lado B
.10 Alojamiento de las escobillas
.11 Escobilla de carbón
.12 Arandela de compensación
.20 Escudo portacojinetes
.83 Junta para 8.84 (no representada)
.84 Tapa

7.00 Portaescobillas completo
.10 Alojamiento de las escobillas
.11 Escobilla
.12 Cable de empalme
.13 Cobertura del portaescobillas
.14 Junta

8.00 Elementos suplementarios
.01 Tapa
.02 Junta
.04 Placa intermedia
.06 Clavija
.08 Junta
.20 Transmisión de medida del sincro
.30 Emisor de impulsos
.31 Cubierta para emisor
.32 Junta
.34 Placa intermedia
.80 Generador tacométrico completo
.84 Rotor del generador tacométrico
.86 Estator del generador tacométrico
.90 Escobilla de carbón

Pezzi di ricambio*

1.00 Supporto lato azionamento
.40 Scudo di supporto
.53 Boccola
.60 Cuscinetto a rotolamento
.80 Coperchio del cuscinetto interno (manca se il freno è incorporato)

2.00 Freno completo
.10 Corpo del magnete
.20 Anello d'armatura e anello del freno rotante (2.30)

3.00 Rotore completo
.70 Commutatore

4.00 Carcassa dello statore
.08 Tirante filettato

5.00 Morsettiera completa
.11 Basetta portamorsetti completa
.66 Tappo filettato
.68 Pressacavo
.83 Guarnizione per 5.84 (non rappresentata)
.84 Coperchio della morsettiera

6.00 Supporto lato opposto all'azionamento
.10 Cuscinetto a rotolamento
.11 Rondella elastica
.12 Rondella di compensazione
.20 Scudo di supporto
.83 Guarnizione per 8.84 (non rappresentata)
.84 Coperchio

7.00 Portaspazzole completo
.10 Portaspazzole a faretra
.11 Spazzole di carbone
.12 Cavo di collegamento
.13 Cappa del portaspazzole
.14 Guarnizione

8.00 Elementi incorporati
.01 Coperchio
.02 Guarnizione
.04 Spessore
.06 Presa
.08 Guarnizione
.20 Riduttore di misura del sincro
.30 Datore impulsi
.31 Coperchio del datore impulsi
.32 Guarnizione
.34 Spessore
.80 Dinamo tachimetrica
.84 Rotore della dinamo tachimetrica
.86 Statore della dinamo tachimetrica
.90 Spazzole di carbone

Reservdelar*

1.00 Lager, A-sida
.40 Lagersköld
.53 Hylsa
.60 Rullager
.80 Inre lagerlock (bortfaller vid bromsmontering)

2.00 Broms, komplett
.10 Magnetkropp
.20 Ankarskiva och bromsskiva (2.30)

3.00 Rotor, komplett
.70 Kommutator

4.00 Statorhus
.08 Bultskruv

5.00 Uttagslåda, komplett
.11 Klämmor, komplett
.66 Ändförslutningspropp resp. tätningshylsa
.68 Förskruvning
.83 Tätning för 5.84 (visas ej)
.84 Uttagslådans lock

6.00 Lager, B-sida
.10 Rullager
.11 Fjäderbricka
.12 Utjämningsbricka
.20 Lagersköld
.83 Tätning för 8.84 (visas ej)
.84 Lock

7.00 Borsthållare, komplett
.10 Specialborsthållare
.11 Kolborste
.12 Förbindningskabel
.13 Borsthållarkåpa
.14 Tätning

8.00 Inbyggnader
.01 Kåpa
.02 Tätning
.04 Mellanplatta
.06 Stickkontakt
.08 Tätning
.20 Växel för vridningsgivare
.30 Impulsgivare
.31 Kåpa för impulsgivare
.32 Tätning
.34 Mellanplatta
.80 Takogenerator, komplett
.84 Takorotor
.86 Takostator
.90 Kolborste

D = Diese Dichtflächen sind bei Montagearbeiten vor dem Wiederzusammenbau zu reinigen und mit Loctite 0572 oder Fluid D zu bestreichen, sonst keine Gewährleistung der Schutzart IP 54.

D = During servicing, these surfaces should be cleaned and coated with Loctite 0572 before reassembly, otherwise there can be no guarantee of type of protection IP 54.

D = Lors du réassemblage, ces surfaces d'étanchéité sont à nettoyer et à enduire de Loctite 0572, sinon le degré de protection IP 54 n'est pas assuré.

D = Antes de ensamblar, durante los trabajos de montaje, se limpiarán estas superficies de junta y se untarán con Loctite 0572, ya que de omitirlo no queda garantizada la clase de protección IP 54.

D = Durante lavori di montaggio, prima di esser rimontate, queste superfici di tenuta devono esser pulite e spalmate con Loctite 0572. Altrimenti non può esser garantita la protezione IP 54.

D = Dessa tätningsytor måste vid montagearbeten före återingbyggnad rengöras och instrykas med Loctite 0572. I annat fall kan skyddsform IP 54 ej garanteras.

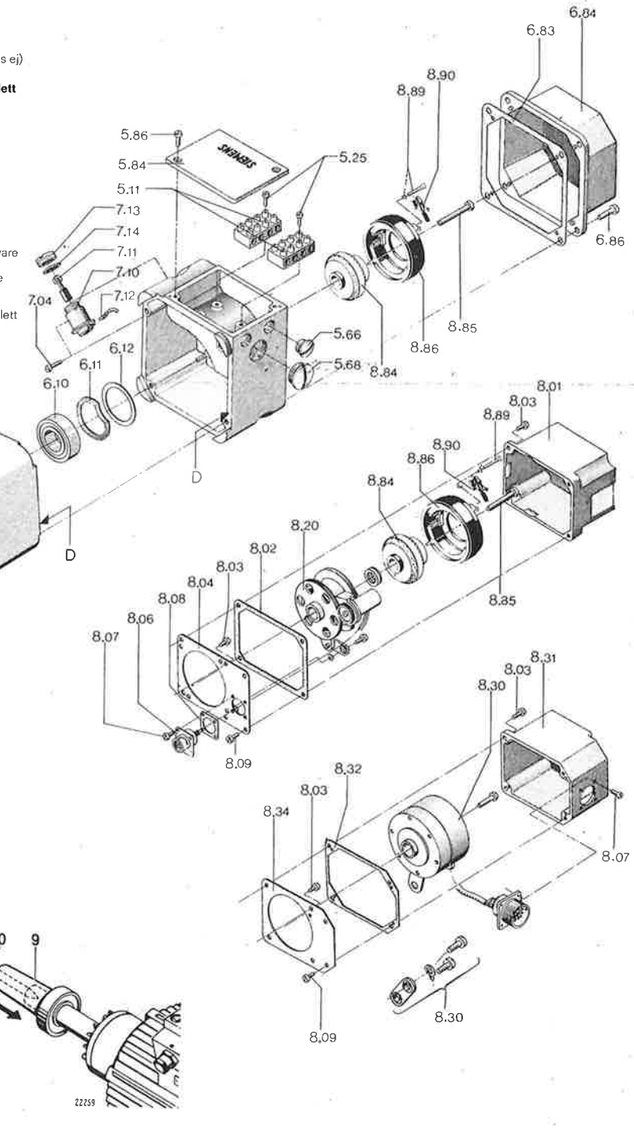

9 Treibhülse
10 Spindel

9 Driving sleeve
10 Spindle

9 Douille d'emmanchement
10 Tige

9 Casquillo de empuje
10 Husillo

9 Campana di spinta
10 Perno filettato

9 Drivhylsa
10 Spindel

22259

Beispiel:
Example: 1HU3 074
Exemple: Nr. E 167 4567 89001
Ejemplo: Lagerschild 1.40
Esempio:
Exempel:

Normteile sind nach Muster im freien Handel zu beziehen.

The standard parts can be procured according to samples from local dealers.

On se procurera dans le commerce les pièces normalisées sur le vu d'un échantillon.

La piezas normalizadas, pueden adquirirse en el comercio según muestra.

Le parti sono normalizzata e reperibili secondo campione in commercio.

Normerad del kan erhållas i fria handeln enl mönster.

1.26
8.89 DIN 931

Lagertyp
Type of bearing

DIN 625

1.28
2.22
8.11 DIN 6912
8.85

3.38 DIN 6885

5.25
5.86 DIN 84
6.86
7.04
8.03
8.07
8.09
8.89

1.38 DIN 125

8.88 DIN 127

1.37
6.22 DIN 934

* Ersatzteile vom Werk lieferbar.
* Spare parts to be ordered from our works.
* Peuvent être fournies par l'usine comme pièces de rechange.
* Se suministra por la fábrica en calidad de pieza de repuesto.
* Viene fornito come pezzo di ricambio dalla fabbrica.
* Kan beställes som reservdel från fabriken.

SIEMENS

Tachogenerator 1HU1 052

Tachogenerator
Dynamo tachymétrique
Generador tacométrico
Dinamo tachimetrica
Takometergenerator

Betriebsanleitung/Instructions EWN-Bestell-Nr./Order No.: 610.41174/21 e

Warnung **Die Betriebanleitung mit Angaben zur Sicherheit (gelb) muß mit beachtet werden.**

Beschreibung

Anwendungsbereich

Der Gleichstrom-Tachogenerator wird zur Drehzahlistwerterfassung bei Ein- und Mehrquadrantantrieben eingesetzt. Anbau an elektrische Maschinen B-seitig ohne gesonderte Kupplung.

Aufbau

Der Tachogenerator entspricht den VDE-Bestimmungen. Der Tachogenerator hat Außenpolerregung durch Dauermagnete. Der Tacholäufer gibt eine drehrichtungsabhängige Gleichspannung ab. Die Tachospannung ist über Heißleiter temperaturkompensiert.

Warnung **Bei laufender Hauptmaschine liegt an den Klemmen bzw. Wickelenden des Tachogenerators Spannung.**

Technische Daten

(Bei Nenndrehzahl und Nennbürde, wenn nicht anders angegeben)

Nenn-Gleichspannung	20 V
Nennstrom	1,5 mA
Nenndrehzahl	1000/min
Nennbürde	13,3 kΩ
Spannungstoleranz	± 8 %
Temperaturkompension	± 1 % Spannungsabweichung im Temperaturbereich + 20 . . . 100 °C

Scheitelwelligkeit	der Spannung	≤ 1,0 %	im gesamten Drehzahlbereich
Linearitätsfehler		≤ 0,2 %	
Reversierfehler		≤ 0,2 %	

Drehzahlbereich	0 bis 8000/min (in beiden Richtungen)
Maximaler Strom	10 mA
Isolierstoffklasse	F
Bauform	IM 5210
Schutzart	IP 55 (mit Abdeckkappe und bei entsprechenden Anbauverhältnissen)

Tachospannungshöhe und Temperaturkompensation sind für die Nennbürde von 13,3 kΩ optimiert.

Hinweis: Bei Änderung der Bürde (zulässiger Bereich: 10 kΩ ≤ R_B ≤ 80 kΩ) tritt eine Änderung der Spannungshöhe und Verschlechterung der Temperaturkompensation auf.

Bei Messungen am Tachogenerator nur hochohmige Meßinstrumente (R_i = 100 kΩ/V) verwenden.

Instandhaltung

Überprüfung

Kontrolle von Bürsten- und Kommutatorzustand jeweils bei Wartung der Hauptmaschine (nach 3000 bis 5000 h). Maximale Bürstenstandzeit ca. 10 000 bis 15 000 h.

Warning **Please also observe Operating Instructions (yellow) with special notes on safety.**

Description

Application

The direct-current tachogenerator is used to measure the actual value of the speed of single and multiple-quadrant drives. It is attached to the non-drive end of electrical machines without a separate coupling.

Construction

The tachogenerator is in accordance with VDE specifications. The tachogenerator has a stationary permanent-magnet field system. The armature produces a direct voltage, the polarity of which is dependent on the direction of rotation. Temperature compensation of the tacho-generator voltage is provided by N.T.C. thermistors.

Warning **When the main machine is running, on lad a voltage is present at the terminals or the winding ends of the tachogenerator.**

Technical data

(at rated speed and rated burden unless otherwise specified)

Rated voltage	20 V DC
Rated current	1.5 mA
Rated speed	1000 rev/min
Rated burden	13.3 kΩ
Voltage tolerance	± 8 %
Temperature compensation	Voltage deviation of ± 1 % in the temperature range + 20 to 100 °C

Ripple factor	of the voltage	≤ 1.0 %	in the whole speed range
Linearity error		≤ 0.2 %	
Reverse operation error		≤ 0.2 %	

Speed range	0–8000 rev/min (in both directions)
Maximum current	10 mA
Class of insulation	F
Type of construction	IM 5210
Degree of protection	IP 55 (with cover cap and appropriate mounting position)

The tachogenerator voltage level and the temperature compensation give optimal results with a rated burden of 13.3 kΩ

Note: With a different value of burden (permissible range: 10–80 kΩ) the voltage level is different and the temperature compensation is less accurate.

High-resistance measuring instruments only (R_i = 100 kΩ/V) must be used for measurements on the tachogenerator.

Maintenance

Checks

Inspect the brush and commutator conditions during the maintenance of the main machine (after 3000 to 5000 h). Maximum service life of brushes approx. 10 000 h to 15 000 h.

Alle Rechte vorbehalten. All rights reserved.
Tous droits réservés. Nos reservamos todos los derechos.
Tutti i diritti riservati. All rätt förbehålles.

© Siemens AG 1982

Pflege (Wartung) siehe Fig. 2, 3

Bürstenwechsel durchführen, wenn Bürsten der Hauptmaschine gewechselt werden. Bürstenbügel von 8.90 ausklinken, Bürstenreste entfernen, Bürstenapparat und Kommutator von Bürstenstaub säubern, Tachogenerator ausblasen, neue Bürste mit Bürstenbügel (8.90) einklinken.
Ist der Kommutator riefig, muß er überdreht werden. Kleinster zulässig Außendurchmesser 38 mm; Rz = 3...7 μm. Isolation zwischen den Kommutatorlamellen sauber ausfräsen. Maximal zulässige Rundlaufabweichung am demontierten Tacholäufer 0,02 mm.

Instandsetzung

Abbauen (Demontage) des Tachogenerators (s. Fig. 1, 2, 3)

Nach Abnehmen der Abdeckkappe, Lösen der Steckverbindungen (V), Kennzeichnen der Leitungen und axialem Ausklinken der Bürstenbügel wird der Ständer durch Lösen der zwei Zylinderschrauben M5 (8.89) demontiert.
Demontage des Tacholäufers (8.84): M6 Befestigungsschraube (8.85) oder sonstiges Befestigungselement herausschrauben. Stahlstift „G" (4,8 x 24) bis zum Anschlag in die Motorwelle einstecken (zum Schutz der Zentrierung im Wellenende). An Stelle der Befestigungsschraube oder des sonstigen Befestigungselementes eine M8 Schraube (S) (Mindestlänge 30 mm) oder Schrauben nach Angaben in der Betriebsanleitung der Hauptmaschine eindrehen und dadurch Läufer vom konischen Sitz auf der Motorwelle (Kegel 1:10) abdrücken. Mitdrehen des Läufers durch Halten am Sechskant (SW 19) der Läufernabe verhindern.

Anbauen (Montage) des Tachogenerators (siehe Fig. 1)

Der Tacholäufer (8.84) wird mit der Doppelkonuswelle gemäß Skizze auf das konische Wellenende A der Hauptmaschine geschoben und mit der Innensechskantschraube M6 (8.85) oder einem Befestigungselement gemäß der Betriebsanleitung für die Hauptmaschine befestigt. Anziehdrehmoment für (8.85) oder das entsprechende Befestigungselement: Nach der Betriebsanleitung der Hauptmaschine oder bei fehlenden diesbezüglichen Angaben 10 Nm. Maximale Rundlaufabweichung des Kommutators 0,04 mm.
Dann wird der Ständer (8.86) am Zentrierrand des Lagerschildes (6.20) oder am Flansch der Zwischenanbauten (z. B. Drehmelder-Meßgetriebe) montiert. Die Bürsten werden nach der Ständermontage durch axiales Einklinken der Bürstenbügel von 8.90 montiert (siehe „Pflege [Wartung]"). Auf einwandfreien Sitz der Bürstenbügel achten.
Das Läufer-Ständer-System kann frei kombiniert und ausgetauscht werden.

Elektrischer Anschluß des Tachogenerator (s. Fig. 3)

Elektrischer Anschluß erfolgt über Steckverbindungen 2A1 (Plus*) und 2A2 (Minus*) an den Bürstenbügeln von 8.90.

* bei Rechtslauf des Antriebs

Hinweis: Temperaturkompensation muß in Serie mit der Minusbürste geschaltet sein. Nach Möglichkeit abgeschirmte Leitungen verwenden.

Servicing (see Figs. 2, 3)

Change brushes when the brushes of the main machine are changed. Disengage the brush holders of 8.90, remove any brush remains, clean the brushgear and the commutator of carbon dust, clean the tachogenerator with compressed air, engage the new brush holders (8.90).
Skim the commutator if it is scored. The minimum permissible outside diameter is 38 mm; Rz = 3...7 μm. Undercut the insulation between the commutator segments. The maximum permissible radial eccentricity of the dismantled tachogenerator rotor is 0.02 mm.

Repair

Dismantling the tachogenerator (see Figs. 1, 2, 3)

After removing the cover cap disconnecting the push-on connectors (V), marking the leads and the axial disengagement of the brush holders, the stator can be dismantled by undoing the two cheese-headed screws M5 (8.89).
Dismantling of the rotor (8.84): Unscrew the M6 fixing screw (8.85) or other fixing element. Insert the steel pin "G" (4.8 x 24) completely into the motor shaft (to protect the centre of the shaft end). In place of the fixing screw or other fixing element, screw in an M8 bolt (S) of minimum length 30 mm, or screws according to the Instructions for the main machine. In this way the rotor is separated from the motor shaft (bevel 1:10). The rotor hub has a hexagon bolt (19 mm between flats) which should be engaged to prevent the rotor from turning.

Assembly of tachogenerator (see Fig. 1)

The tachogenerator rotor (8.84) is fitted onto the tapered shaft end A of the main machine by means of the double taper-socketed shaft as shown in the drawing and secured in place with an internal hexagonal bolt M6 (8.85) or a fixing element according to the Instructions for the main machine. The tightening torque for (8.85) or the respective fixing element is according to the Instructions of the main machine. If there are no specifications in this respect, the tightening torque is 10 Nm. Maximum permissible run-out of the commutator 0.04 mm.
The stator (8.86) is positioned on the centering edge of the end shield (6.20) or on the flange of the intermediate units (e.g. resolver.) The brushes are fitted after the stator has been fitted into place by axial engagement of the brush holders of 8.90 (cf. "Servicing"). Make sure that the brush holders are correctly fitted.
Parts of the rotor-stator system can be combined or exchanged without restriction.

Electrical connection of tachogenerator (see Fig. 3)

Electrical connection is made by push-on connectors 2A1 (positive*) and 2A2 (negative*) to the brush holders of 8.90.

* with clockwise rotation of the drive

Note: It is important that the temperature compensation unit is connected in series with the negative brush. Where possible, screened leads should be used.

Attention **respecter les règles de sécurité énoncées à la notice d'instructions jointe (jaune)**

Description

Utilisation

La dynamo tachymétrique est utilisée pour la saisie de la vitesse instantanée des entraînements uniquadrants et multiquadrants. Elle se monte sur les machines électriques côté B, sans accouplement séparé.

Constitution

La dynamo tachymétrique est conforme aux prescriptions VDE. Elle a une excitation par aimants permanents fixés sur le stator. L'induit à courant continu délivre une tension continue fonction du sens de rotation. La tension tachymétrique est compensée en température par l'intermédiaire de thermistances C.T.N.

Attention **Lorsque la machine principale tourne, les bornes ou les extrémités de bobine de la dynamo sont sous tension.**

Aviso **Hay que observar también las Instrucciones de Servicio (amarillo) con indicaciones sobre seguridad.**

Descripción

Empleo

El generador tecométrico de corriente continua se emplea para registrar las valores efectivos de las velocidades de giro de los accionamientos de uno o más cuadrantes. Se monta en el lado LCA de las máquinas eléctricas, sin acoplamiento especial.

Constitución

El generador cumple las prescripciones VDE. El generador tacométrico tiene excitación de polos exteriores mediante imanes permanentes. El inducido suministra una tensión continua, dependiente del sentido de giro. Esta tensión tiene una compensación de la temperatura a través de resistencias de coeficiente negativo.

Aviso **Si marcha la máquina principal, los bornes y los extremos de las bobinas del generador tacométrico estarán bajo tensión.**

Caractéristiques techniques

(sauf indication contraire, à la vitesse et à la résistance de charge nominales)

Tension continue nominale	20 V
Courant nominal	1,5 mA
Vitesse de rotation nominale	1000 tr/min
Résistance de charge nominale	13,3 kΩ
Tolérance de tension	± 8 %
Compensation en température	écart de tension ± 1 % dans la gamme de température de + 20 à 100 °C

Ondulation crête à crête	de la tension	≤ 1,0 %	sur toute la plage de vitesse
Erreur de linéarité		≤ 0,2 %	
Erreur de marche dans les deux sens		≤ 0,2 %	

Plage de vitesse	0 à 8000 tr/min (dans les deux sens de rotation)
Courant maximal	10 mA
Classe d'isolation	F
Forme	IM 5210
Degré de protection	IP 55 (avec capot et pour un montage approprié)

La valeur de la tension tachymétrique et la compensation en température sont optimisées pour la résistance de charge nominale de 13,3 kΩ.

Nota: en cas de modification de la résistance de charge (plage admissible: 10 kΩ ≦ R_B ≦ 80 kΩ), il y a modification de la valeur de la tension et altération de la compensation en température.

Pour les mesures effectuées sur la dynamo tachymétrique, utiliser uniquement des appareils de mesure à très grande résistance interne (R_i = 100 kΩ/V).

Entretien

Contrôles

Vérifier l'état des balais et du collecteur lors de l'entretien de la machine principale (au bout de 3000 à 5000 h). Durée maximale de vie des balais: 10 000 h à 15 000 h environ.

Soins (voir Fig. 2, 3)

Remplacer les balais quand on change ceux de la machine principale. Décliqueter les étriers porte-balais de 8.90, enlever les résidus de balais, nettoyer (dépoussiérer) balais, ressorts et guidages ainsi que le collecteur. Passer le compartiment du collecteur au jet d'air comprimé. Encliqueter le balai neuf avec porte-balais (8.90). Si le collecteur est strié, il faut le reprendre au tour. Diamètre extrieur minimal admissible: 38 mm; Rz = 3 à 7 µm. Fraiser méticuleusement l'entrelame en micanite. Faux rond maximal admissible du rotor de la dynamo démonté: 0,02 mm.

Remise en état

Démontage de la dynamo tachymétrique (voir Fig. 1, 2, 3)

Retirer le capot et les connecteurs (V), repérer les conducteurs et décliqueter les balais dans le sens axial. Desserrer les deux vis à tête cylindrique M5 (8.89) et déposer le stator.
Dépose du rotor (8.84) de la dynamo tachymétrique. Desserrer et extraire la vis de fixation M6 (8.85) ou tout autre élément de fixation. Engager une pige en acier (ø 4,8 x 24) dans l'arbre du moteur et l'enfoncer jusqu'à la butée afin d'assurer la protection du centrage en bout d'arbre. Dégager le rotor du siège conique de l'arbre du moteur (conicité 10 %) en vissant une vis M8 d'extraction (longueur minimale 30 mm), ou autre vis conforme aux instructions de la machine principale, à la place de la vis de fixation M6 ou de l'élément de fixation correspondant. Immobiliser le rotor en rotation au niveau du six pans (cote sur plats 19) du moyeu.

Montage de la dynamo tachymétrique (voir Fig. 1)

Emmancher le rotor de la dynamo (8.84) par son arbre à alésage biconique sur le bout d'arbre (A) de la machine principale suivant le croquis et le fixer à l'aide d'une vis six pans creux M6 (8.85) ou autre élément de fixation prescrit par les instructions de service de la machine principale. Couple de serrage de (8.85) ou de l'élément de fixation correspondant, conformément aux instructions de service de la machine principale, ou, à défaut d'indications en ce sens, 10 Nm. Excentricité maximale du collecteur 0.04 mm.

Datos técnicos

(referidos a la velocidad y carga nominales, siempre que no se haya indicado lo contrario)

Tensión nominal continua	20 V
Intensidad nominal	1,5 mA
Velocidad nominal de giro	1000 r/min
Carga nominal	13,3 kΩ
Tolerancia para la tensión	± 8 %
Compensación de la temperatura	± 1,0 % de diferencia de la tensión en la gama de temperatura + 20 . . . 100 °C

Ondulación cresta	de la tensión	≤ 1,0 %	para toda la gamma de velocidades
Error de linealidad		≤ 0,2 %	
Error reversible		≤ 0,2 %	

Gama de velocidades	0–8000 r/min (en ambas direcciones)
Intensidad máxima	10 mA
Clase de aislamiento	F
Forma constructiva	IM 5210
Grado de protección	IP 55 (con caperuza y condiciones de montaje adecuadas)

El nivel de tensión y la compensación de la temperatur se han optimizado para la resistencia nominal de 13,3 kΩ.

¡Atención! Si se modifica la resistencia (gama admisible: 10 kΩ ≦ R_B ≦ 80 kΩ), se modificará también el nivel de tensión y se empeorará la compensación de la temperatura.

Para efectuar mediciones en el generador tacométrico, emplear sólo instrumentos de alta resistencia (R_i = 100 kΩ/V).

Conservación

Pruebas

Comprobar el estado de las escobillas y del colector junto con el mantenimiento de la máquina principal (después de unas 3000 a 5000 h de servicio). Duración máxima de las escobillas: 10 000 h . . . 15 000 h aprox.

Mantenimiento (véase la fig. 2, 3)

Cambiar las escobillas cuando se renueven las de la máquina principal. Extraer los portaescobillas de 8.90, sacar de ellos los restos de las escobillas y limpiar todas las piezas así como el colector. Limpiar también todo el generador tacométrico con aire comprimido. Colocar ahora las nuevas escobillas con su porteascobillas (8.90). Si el colector tuviese estrías, repasarlo a torno. Diámetro exterior mínimo admisible 38 mm; Rz = 3...7 µm. Fresar minuciosamente el aislamiento de mica que hay entre las delgas del colector. Excentricidad radial máxima admisible en el rotor desmontado del tacogenerador 0,02 mm.

Reparación

Desmontaje del tacogenerador (véanse las figs. 1,2, 3)

Después de quitar la caperuza, se afloja la unión enchufable (V), se marcan los conductores y se sacan, en sentido axial los portaescobillas. Aflojando ahora los dos tornillos cilíndricos M5 (8.89), se puede extraer el estator.
Desmontaje del rotor (8.84): Quitar el tornillo M6 (8.85) o del elemento de fijación e insertar la espiga de acero (G) de 4,8 x 24, hasta le tope, en el eje del motor (para proteger el punto de centraje en el extremo del eje). En lugar del tornillo o del elemento de fijación, se coloca un tornillo M8 (S) (longitud mínima 30 mm) o el, tornillo indicado en las instrucciones de servicio de la máquina principal, haciendo así que el rotor se suelte de su asiento cónico sobre el eje del motor (conicidad 1:10). Para que el rotor no pueda girar, se sujeta con una llave (boca 19) que se aplica sobre el hexágono del cubo del rotor.

Montaje del tacogenerador (véase la fig. 1)

El rotor (8.84) se encaja, con su eje de doble cono, sobre el muñón cónico (A) de la máquina principal, como puede verse en la figura; se fija con el tornillo de hexágono interior M6 (8.85), o con el elemento indicado en las instruciones de servicio de la máquina principal. El par de apriete de (8.85) o del elemento de fijación figura en las instruciones de servicio de la máquina principal en la que se monte. Si faltase este dato, se aplicarán 10 Nm. Excentricidad de giro máxima del colector: 0.04 mm.

Monter ensuite le stator (8.86) dans le centrage du flasque-palier (6.20) ou sur la bride des éléments intermédiaires rapportés (par ex. résolveur). Après le montage du stator, on montera les balais par encliquetage axial des étriers porte-balais de 8.90 (voir «Soins»). Veiller au bon positionnement des porte-balais.

Le système rotor-stator peut être combiné à volonté et remplacé librement.

Raccordement électrique de la dynamo tachymétrique (Fig. 3)

Effectuer les connexions par connecteurs que l'on raccordera aux points 2A1 (positif*) et 2A2 (negatif*) des porte-balais (8.90).

* pour rotation à droite de l'entraînement

Nota: La compensation en temperature doit être branchée en série avec le balei négatif. Utiliser si possible des câbles blindés.

A continuacion, se monta el estator (8.86) sobre el borde de centrado del platillo (6.20) del cojinete o sobre la brida de los equipos intermedios (p. ej.: mecanismos de medición del avisador de giro). Una vez montado el estator, se insertan las escobillas aplicando en sentido axial el portaescobillas de 8.90 (véase «Mantenimiento»). Prestar atención a que el protaescobillas descanse correctamente.
El sistema «rotor-estator» puede ser combinado e intercambiado a discreción.

Conexion eléctrica del tacogenerador (véase la Fig. 3)

La conexión eléctrica se hace con ayuda de uniones enchufables que se fijan al borne 2A1 (positivo*) y al 2A2 (negativo*) de los portaescobillas 8.90.

* al girar el accionamiento a derechas

Indicacion: Prestar atención a que la compensación de la temperatura quede conectada en serie con la escobilla negativa. A ser posible, emplear únicamente conductores blindados.

Attenzione **Devono essere rispettate le istruzioni di esercizio contenenti avvertenze riguardanti la sicurezza (giallo).**

Descrizione

Impiego

La dinamo tachimetrica serve a rilevare il valore istantaneo negli azionamenti ad uno o più quadranti. Essa viene installata su macchine elettriche, lato opposto all'azionamento, senza innesti particolari.

Costruzione

La dinamo risponde alle norme VDE. La dinamo tachimetrica ha eccitazione a poli esterni mediante magneti permanenti. L'indotto eroga una tensione continua dipendente dal senso di rotazione. Per la tensione tachimetrica vi è una compensazione della temperatura realizzata con termistori.

Attenzione **Quando la macchina principale è in marcia, i morsetti o le estremità dell'avvolgimento della dinamo tachimetrica sono sotto tensione.**

Dati tecnici

(a velocità e carico normali, se non è indicato diversamente)

Tensione nominale continua	20 V DC
Corrente nominale	1,5 mA
No. nominale di giri	1000 giri/min
Carico nominale	13,3 kΩ
Tolleranza di tensione	± 8 %
Compensazione della temperatura	± 1 % scostamento di tensione nel campo di temperatura + 20 . . . 100 °C

Ondulazioni di cresta	della	≦ 1,0 %	in tutto il campo di velocità
Errore di linearità	tensione	≦ 0,2 %	
Errore di inversione		≦ 0,2 %	

Campo di velocità	0–8000 giri/min (in entrambi i sensi di rotazione)
Corrente massima	10 mA
Classe d'isolamento	F
Forma costruttiva	IM 5210
Sistema di protezione	IP 55 (con cappa e condizioni di montaggio idonee)

Il valore della tensione tachimetrica e la compensazione della temperatura sono ottimizzati per un carico nominale di 13,3 kΩ.

Nota: Se il carico viene modificato (campo ammissibile: 10 kΩ≦ R_B ≦ 80 kΩ) subentra una variazione del valore di tensione ed un peggioramento della compensazione di temperatura.

Per effettuare misurazione sulla dinamo tachimetrica vanno impiegati solamente strumenti di misura ad alta resistenza (R_i = 100 kΩ/V).

Manutenzione

Ispezione

Controllare lo stato delle spazola e del commutatore ogni volta che viene effettuata la manutenzione della macchina principale (dopo 3000–5000 ore). Durata massima delle spazzole: ca. 10 000 ore . . . 15 000 ore.

Varning **Beakta driftsinstruktion med säkerhetsanvisningar (gul).**

Beskrivning

Användning

Likströms-takometergeneratorn användes vid en- och flerkvadrant drivanordningar för mätning av varvtalets ärvärde. Den monteras på b-sidan av elektriska maskiner utan särskild koppling.

Konstruktion

Takometergeneratorn uppfyller VDE-bestämmelserna. Takometergeneratorn har ytterpolsmagnetisering, genom permanenta magneter. Likströmsankaret avger en av rotationsriktningen beroende likspänning. Takometerspänningen är temperaturkompenserad över termistor.

Varning **Med roterande huvudmaskin ligger spänning på takometergeneratorns klämmor resp. lindningsändar.**

Tekniska data

(Vid märkvarvtal och märkbelastning, om ej annat angives)

Märklikspänning	20 V–
Märkström	1,5 mA
Märkvarvtal	1000 r/min
Märkbelastning	13,3 kΩ
Spänningstolerans	± 8 %
Temperaturkompensation	± 1 % spänningsavvikelse i temperaturområdet + 20 . . . 100 °C

Topvågighet	hos	≦ 1,0 %	över hela varvtalsområdet
Linearitetsfel	spänningen	≦ 0,2 %	
Reverserfel		≦ 0,2 %	

Varvtalsområde	0 till 8000 r/min (i båda rotationsriktningarna)
Maximal ström	10 mA
Isolationsklass	F
Utförandeform	IM 5210
Skyddsform	IP 55 (med kåpa och motsvarande påbyggnadsförhållanden)

Takometerspänningen och temperaturkompensationen är optimerade för märkbelastningen på 13,3 kΩ.

Obs: En ändring av belastningen (tillåtet område: 10 kΩ≦ R_B ≦ 80 kΩ) medför en ändring av spänningen och en försämring av temperaturkompensationen.

Vid mätningar på takogeneratorn får endast högresistiva mätinstrument användas (R_i = 100 kΩ/V).

Skötsel

Kontroll

Kontroll av borstarna och kommutatorn genomföres vid översyn av huvudmaskinen (efter ca. 3000–5000 h). Maximal livslängd hos borstarna, ca. 10 000 h . . . 15 000 h.

SIEMENS

Sicherheitsinformationen für elektrische Betriebsmittel zum Einsatz in Starkstromanlagen

Safety information for electrical equipment for use in heavy current installations
Informations relatives à la sécurité de matériels électriques destinés à être utilsés dans des installations à courant fort
Informaciones de seguridad para los equipos eléctricos que se utilicen en instalaciones de energía
Informazioni per la sicurezza nell' impiego di dispositivi elettrici in impianti ad alta tensione
Säkerhetsinformation för elektrisk utrustning som används i starkströmsanläggningar

Betriebsanleitung / Instructions EWN-Bestell-Nr./Order No.: 610.42356/21

Alle Rechte vorbehalten. All rights reserved.
Tous droits réservés. Nos reservamos todos los derechos.
Tutti i diritti riservati. All rätt förbehålles.

DEUTSCH

Dieses Informationsblatt mit den Warnhinweisen gilt als Zusatz zur produktspezifischen Betriebsanleitung und muß aus Sicherheitsgründen besonders beachtet werden.

GEFAHR

Diese elektrischen Maschinen bzw. Geräte sind Betriebsmittel zum Einsatz in industriellen Starkstromanlagen. Während des Betriebes haben diese Betriebsmittel gefährliche, spannungsführende blanke Teile, ggf. auch bewegte bzw. rotierende Teile. Sie könnten deshalb, z. B. bei unzulässigem Entfernen der erforderlichen Abdeckungen, bei unsachgemäßem Einsatz, falscher Bedienung oder unzureichender Wartung, schwerste gesundheitliche oder materielle Schäden verursachen.

Die für die Sicherheit der Anlage Verantwortlichen müssen deshalb gewährleisten, daß
- ***nur qualifizierte Personen mit Arbeiten an den Maschinen bzw. Geräten beauftragt werden,***
- ***diese Personen u. a. die mitgelieferten Betriebsanleitungen und übrigen Unterlagen der Produktdokumentation bei allen entsprechenden Arbeiten stets verfügbar haben und verpflichtet werden, diese Unterlagen konsequent zu beachten,***
- ***Arbeiten an den Maschinen bzw. Geräten oder in deren Nähe für nichtqualifizierte Personen untersagt werden.***

Qualifiziertes Personal sind Personen, die, auf Grund ihrer Ausbildung, Erfahrung und Unterweisung sowie ihrer Kenntnisse über einschlägige Normen, Bestimmungen, Unfallverhütungsvorschriften und Betriebsverhältnisse, von dem für die Sicherheit der Anlage Verantwortlichen berechtigt worden sind, die jeweils erforderlichen Tätigkeiten auszuführen und dabei mögliche Gefahren erkennen und vermeiden können (Definitionen für Fachkräfte siehe auch DIN VDE 0105 oder IEC 364).
Unter anderem sind auch Kenntnisse über Erste-Hilfe-Maßnahmen und die örtlichen Rettungseinrichtungen erforderlich.
Für Arbeiten an Starkstromanlagen ist das Verbot des Einsatzes nichtqualifizierter Personen z. B. in DIN VDE 0105 oder IEC 364 geregelt.

WARNUNG ***Es wird vorausgesetzt, daß die grundsätzlichen Planungsarbeiten der Anlage sowie alle Arbeiten zu Transport, Montage, Installation, Inbetriebsetzung, Wartung und Reparaturen von qualifiziertem Personal ausgeführt bzw. durch verantwortliche Fachkräfte kontrolliert werden.***

Hierbei sind insbesondere zu beachten:
- ***die technischen Daten und Angaben über die zulässige Verwendung (Montage-, Anschluß-, Umgebungs-***

ENGLISH

This information sheet with its warning is in addition to the operating instructions for the individual products and for safety reasons its contents must be adhered to.

DANGER

The electric machines and equipment are for use in industrial heavy current installations. During operating this equipment has bare parts which are live and dangerous and may also have moving or rotating parts. For this reason, unauthorized removal of the necessary covers, improper use, incorrect operation or insufficient maintenance could lead to severe personal injury or property damage.

Those responsible for the safety of the installation must therefore ensure that
- ***only qualified personnel are entrusted to work on the machines or equipment,***
- ***these persons always have at their disposal the operating instructions and other product documentation supplied when they do such work, and that they undertake to follow consistently any such instructions,***
- ***non-qualified personnel are not permitted to work on or near the machines or equipment.***

Qualified personnel are persons who, on account of their training, experience and instruction and their knowledge of relevant standards, specifications, accident prevention regulations and operating conditions, have been authorized by those responsible for the safety of the plant to carry out the necessary work and who can recognize and avoid possible dangers (see also IEC 364 for definitions of specialist personnel).

A knowledge of first aid is also required as is information about local rescue facilities.
The stipulation that only qualified personnel may work on heavy current installations is included for example in IEC 364.

WARNING ***It is assumed that basic planning work for the installation and all work concerning transport, assembly, commissioning, maintenance and repair is done by qualified personnel or checked by responsible skilled personnel.***

Particular note must be taken of the follwing:
- ***The technical data and information on permissible use (assembly conditions, connection conditions,***

© Siemens AG 1990

und Betriebsbedingungen), die u.a. im Katalog, den Auftragsunterlagen, der Betriebsanleitung, den Schildangaben und der übrigen Erzeugnisdokumentation enthalten sind,

- ***die allgemeinen Errichtungs- und Sicherheitsvorschriften,***
- ***die örtlichen, anlagespezifischen Bestimmungen und Erfordernisse,***
- ***der fachgerechte Einsatz von Werkzeugen, Hebe- und Transporteinrichtungen,***
- ***die Benutzung persönlicher Schutzausstattungen,***
- ***Montagebedingungen für Geräte, die ggf. entsprechend IP00 (ohne Abdeckungen) ausgeliefert werden: Im Betrieb muß der erforderliche Berührungsschutz vorhanden bzw. eine gefährliche Annäherung verhindert sein.***

Die Betriebsanleitungen können aus Gründen der Übersichtlichkeit nicht alle Detailinformationen zu möglichen Bauvarianten enthalten und können insbesondere nicht jeden denkbaren Fall der Aufstellung, des Betriebes oder der Wartung berücksichtigen. Demgemäß sind in den Betriebsanleitungen im wesentlichen nur solche Hinweise enthalten, die bei bestimmungsgemäßer Verwendung der Maschinen oder Geräte in industriellen Einsatzbereichen für qualifiziertes Personal (siehe oben) erforderlich sind.

Falls im Sonderfall bei beabsichtigtem Einsatz der Maschinen oder Geräte in nicht industriellen Bereichen eventuell erhöhte Anforderungen gestellt werden (z. B. Berührungsschutz gegen Kinderfinger o. ä.), müssen diese Bedingungen bei der Montage durch zusätzliche Schutzmaßnahmen anlagenseitig gewährleistet werden.

Bei diesbezüglichen Unklarheiten, insbesondere bei fehlenden produktspezifischen Detail-Informationen, müssen die erforderlichen Klärungen über die zuständige SIEMENS-Vertriebsstelle herbeigeführt werden. Bitte hierzu grundsätzlich Maschinen- bzw. Geräte-Typbezeichnung und Fertigungsnummer angeben.

ES WIRD EMPFOHLEN, FÜR PLANUNGS-, MONTAGE-, INBETRIEBSETZUNGS- UND SERVICE-AUFGABEN DIE UNTERSTÜTZUNG UND DIENSTLEISTUNGEN DER ZUSTÄNDIGEN SIEMENS-SERVICEZENTREN IN ANSPRUCH ZU NEHMEN.

HINWEIS: Für allgemeine Arbeiten, z. B. zum Prüfen eingehender Lieferungen (Transportschäden), zum langfristigen Einlagern und Konservieren von Maschinen, zur Fundamentprüfung, zum Aufziehen von Kupplungen, Aufstellen und Ausrichten von Maschinen, Installationsmaßnahmen u.v.a., sind weitere Detail-Informationen in den SIEMENS-Montageschriften oder Arbeitsrichtlinien enthalten, die erforderlichenfalls über die Vertriebsstellen bezogen werden können.

⚠ **WARNUNG** ***Um Störungen vorzubeugen, ist es erforderlich, die vorgeschriebenen Wartungs-, Inspektions- und Revisionsmaßnahmen regelmäßig von routiniertem Service-Peronal durchführen zu lassen (siehe oben).***
Veränderungen gegenüber dem Normalbetrieb (höhere Leistungsaufnahme, Temperaturen oder Schwingungen, ungewöhnliche Geräusche oder Gerüche, Ansprechen der Überwachungseinrichtungen usw.) lassen erkennen, daß die Funktion beeinträchtigt ist. Zur Vermeidung von Störungen, die ihrerseits mittelbar oder unmittelbar schwere Personen- oder Sachschäden bewirken könnten, muß das zuständige Wartungspersonal dann umgehend verständigt werden.

⚠ ***IM ZWEIFELSFALL DIE ENTSPRECHENDEN BETRIEBSMITTEL SOFORT ABSCHALTEN!***

HINWEIS: Es wird darauf hingewiesen, daß der Inhalt der Betriebsanleitungen und Produktdokumentationen nicht Teil einer früheren oder bestehenden Vereinbarung, Zusage oder eines Rechtsverhältnisses ist oder dieses abändern soll. Sämtliche Verpflichtungen von Siemens ergeben sich aus dem jeweiligen Kaufvertrag, der auch die vollständige und allein gültige Gewährleistungsregelung enthält. Diese vertraglichen Gewährleistungsbestimmungen werden durch die Ausführungen dieser Anleitungen und Dokumentationen weder erweitert noch beschränkt.

ambient and operating conditions), which are contained in the catalog, order documents, operating instructions, rating plate and other product documentation,

- ***The general erection and safety regulations,***
- ***The local, plant-specific specifications and requirements,***
- ***The proper use of tools, lifting gear and transport devices,***
- ***The use of personal protective gear.***
- ***Installation instructions for equipment which may be supplied to IP00 (without covers). In operation, this equipment must have the necessary shock protection fitted or access must be prevented which could result in danger.***

These instructions cannot claim to cover all details of possible equipment variations, nor in particular can they provide for every possible example of installation, operation or maintenance. This means that the instructions for machines or equipment for industrial applications normally include only the directions to be followed by qualified personal (see above) where the equipment is used for its defined purpose.

If in special cases it is intended to use the machines or equipment in non-industrial areas and therefore requirements may be more stringent, e.g. protection against contact by children fingers, ect., compliance with such requirements must be assured during installation by providing additional protective measures on site.

If there are any uncertainties in this respect, particularly in the event of missing product-related information, clarification must be obtained via the appropriate SIEMENS sales office. Please always indicate the machine or equipment type and serial number.

WE WOULD RECOMMEND ASKING FOR THE ASSISTANCE AND SERVICES OF THE COMPETENT SIEMENS SERVICE CENTRES FOR PLANNING, INSTALLATION, COMMISSIONING AND SERVICING TASKS.

NOTE: For general work such as checking of incomming deliveries (damage in transit), storing and preserving for prolonged periods of time, foundation testing, fitting of couplings, installation and alignment of machines, etc., further detailed information is given in the SIEMENS installation instructions which can be obtained from the sales offices.

⚠ **WARNING** ***The specified maintenance, inspection and overhaul measures must be carried out regularly by trained service personnel in order to avoid any interruptions or breakdowns (see above). Deviations from the normal performance (higher power input, higher temperatures or vibrations, unusual noises or odours, reactions by monitoring equipment, ect.) indicate that proper function of the unit is impaired. In order to avoid faults, which might directly or indirectly cause serious damage to property or injury to persons, the responsible maintenance personnel must be notified immediately***

⚠ ***IF IN DOUBT, SWITCH OFF THE EQUIPMENT IMMEDIATELY.***

NOTE: The contents of the operating instructions and product documentation shall not become part of or modify any prior or existing agreement, commitment or relationship. The Sales Contract contains the entire obligations of Siemens. The warranty contained in the contract between the parties is the sole warranty of Siemens. Any statements contained herein do not create new warranties or modify the existing warranty.

ITALIANO

Il presente foglio informativo con gli avvisi di allarme vale come supplemento aggiuntivo alle istuzioni specifiche per l'uso di ogni apparecchiatura e, per motivi di sicurezza, deve venire attentamente rispettato.

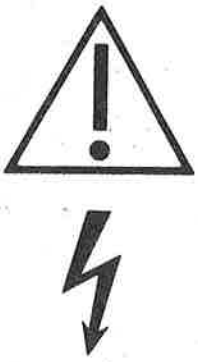

PERICOLO

I macchinari e le apparecchiature elettriche sono strumenti impiegati in impianti industriali sottoposti ad alta tensione. Durante il funzionamento tali dispositivi possiedono parti pericolose, sia perché poste sotto tensione e non isolate, sia perche' in moto, lineare o rotatorio. Esse quindi sono in grado di causare gravissimi danni a persone o cose, se, ad esempio, le protezioni necessarie vengono rimosse, in caso di utilizzo non adeguato, di servizio non corretto o di non sufficiente manutenzione.

Per questo motivo i responsabili per la sicurezza dell'impianto devono garantire che:

- ***ai macchinari od alle apparechiature elettriche vengano assegnate solo persone qualificate***
- ***tali persone possano non solo sempre disporre presso tutte le relative postazioni di lavoro delle istruzioni per l'uso originali e di ulteriore documentazione sul prodotto, ma anche che ne osservino consequentemente i contenuti***
- ***le lavorazioni ai macchinari e/o apparecchi o nelle vicinanze di essi vengano interdetti a personale non qualificato.***

SVENSKA

Detta informationsblad med varningsanvisningar gäller som tillägg till den produktspecifika driftsinstruktionen och måste ges speciell uppmärksamhet av säkerhetsskäl.

FARA

De elektriska maskinerna och apparaterna är utrustning för användning i industriella starkströmsanläggningar. Under driften har dessa utrustningenheter farliga, spänningsförande blanka detaljer, i vissa fall även rörliga eller roterade delar. De kan därför förorsaka allvarliga personeller materialskador, t.ex. om erforderliga beröringsskydd avlägsnas i strid mot gällande bestämmelser, vid osakkunnig användning, felaktig manövrering eller otillräckligt underhåll.

De som ansvarar för anläggningen måste därför säkerställa att:

- ***enbart kvalificerad personal tillåts arbeta med maskinerna och utrustningsenheterna.***
- ***dessa personer ständigt har tillgång till medföljande driftinstruktioner, och övrig produktdokumentation vid allt arbete på utrustningen och åläggs att i varje detalj följa anvisningarna i denna dokumentation.***
- ***okvalificerad personal ej tillåts arbeta med maskinerna och apparaterna, eller i deras närhet.***

Per personale qualificato si intendono quelle persone che, per la loro formazione, esperienza e istruzione, nonché le conoscenze delle relative norme, prescrizioni, provvedimenti per la prevenzione degli incidenti e sulle condizioni di servizio, sono stati autorizzati dal responsabile della sicurezza dell'impianto ad eseguire qualsiasi necessaria attività ed in questa essere in grado di riconoscere ed evitare ogni possibile pericolo. (Definizione per il personale tecnico, vedi anche VDE 0105 o IEC 364).
Fra l'altro si richiedono anche nozioni di pronto soccorso e sulle misure di salvataggio in loco.
Per lavorazioni in impianti ad alta tensione, il divieto di impiego di personale non qualificato e'regolamentato, ad esempio, nelle norme DIN VDE 0105 o IEC 364.

Kvalificerad personal är personer som på grundval av utbildning, erfarenhet eller instruktioner samt kunskap rörande tillämpliga normer, bestämmelser, olycksfallsföreskrifter och driftsförhållanden har bemyndigats av säkerhetsansvarig chef att utföra erforderliga arbetsuppgifter och därvid kan uppfatta och undvika möjliga risker (definition av fackpersonal se även DIN VDE 0105 elleer IEC 364).

Bland annat erfordras även kännedom rörande första hjälpen och om lokala räddningsanordningar.
För arbetet på starkströmsanläggningar regleras förbudet rörande användning av okvalificerad personal t.ex. i DIN VDE 0105 eller IEC 364.

ATTENZIONE ***Viene richiesto che, i fondamentali lavori di disposizione dell'impianto, come pure trasporto, montaggio, installazione, messa in servizio, manutenzione e riparazioni vengano eseguiti da personale qualificato e controllati dal personale tecnico responsabile.***

A questo riguardo occorre in particolar modo osservare:

- ***dati tecnici e specifiche sull'utilizzo consentito (condizioni di montaggio, collegamento, ambientali e di servizio), che sono fra l'altro contenute nel catalogo, nei dati di progetto, nel manuale di servizio, nei dati di targa ed in ulteriori documentazioni sul prodotto***
- ***generali prescrizioni di costruzione e sicurezza***
- ***provvedimenti e richieste locali, specifiche dell'impianto***
- ***idonee modalita' di impiego di utensili, sollevatori e trasportatori***
- ***l'impiego delle personali dotazioni protettive***
- ***modalità di montaggio di apparecchiature, che vengono consegnate in conformita' con IP00 (senza coperture): durante il servizio deve essere disponibile la necessaria protezione da contatto e deve essere interdetto un accostamento pericoloso.***

VARNING ***Det förutsätts att principiellt planeringsrbete rörande systemet samt alla arbeten med transport, installation, idrifttagning, underhåll och reparation utförs av kvalificerad personal eller kontrolleras av ansvarig fackpersonal.***

Därvid måste man framför allt ge akt på:

- ***tekniska data och uppgifter rörande tillåten användning (monterings-, anslutnings-, miljö- och driftsvillkor), som bl.a. finns i katalogen, orderhandlingarna, driftsinstruktionen, på skyltar och övrig produktdokumentation;***
- ***de allmänna installations– och säkerhetsföreskrifterna;***
- ***lokala, anläggningsspecifika bestämmelser och krav;***
- ***fackmannamässig användning av verktyg, lyft- och transportdon;***
- ***användning av personlig skyddsutrustning;***
- ***monteringvillkor för apparater som i vissa fall levereras enl. IP00 (i öppet tillstånd): vid driften måste det finnas erforderliga beröringsskydd eller anordningar som förhindrar personer från att komma i närheten av utrustningen.***

Le istruzioni sul funzionamento delle apparecchiature non possono, pena una mancata globalità, contenere nel dettaglio tutte le informazioni sulle possibili varianti costruttive, ne' tanto meno ogni pensabile caso nel montaggio, nel servizio o nella manutenzione. Nei manuate solamente le istruzioni necessarie al personale qualificato per un adeguato utilizzo di macchinari o di apparecchiature in aree di lavoro industriali.

För överskådlighetens skull kan driftsinstruktionerna inte alltid innehålla all detaljinformation rörande möjliga konstruktionsvarianter, och kan framför allt inte ta hänsyn till alla tänkbara slag av installation, drift och underhåll. Sålunda innehåller driftsinstruktionerna i allmänhet bara sådana anvisningar som krävs för kvalificerad personal (se ovan) i samband med korrekt användning av maskiner eller apparater i industriella sammanhang.

Se in casi speciali di installazioni di macchinari od apparecchia-ture non in aree industriali, vengano eventualmente poste ulteriori condizioni (es.: protezione da contatto per le dita di bambini, etc), tali condizioni devono venire garantite dall' impianto in fase di montaggio attraverso misure di protezione aggiuntive.

Om av maskiner eller apparater enstaka fall används utanför industriområden och detta medför skärpta krav (t.ex. beröringsskydd för barn), så måste dessa villkor säkerställas genom montering av extra skyddsanordningar.

In mancanza di chiarezza, specialmente con mancanti informazioni dettagliate sul particolare prodotto, occorre provvedere al chiarimento necessario attraverso le strutture commerciali SIEMENS competenti. Si prega di indicare chiaramente il codice del macchinario o della apparecchiatura ed il relativo numero di produzione.

Ta kontakt med närmaste SIEMENS-kontor vid oklarheter i detta avseende, framför allt avsaknad av produktspecifik detaljinformation. Ange därvid typbeteckning och tillverkningsnummer för berörda maskiner eller apparater.

PER IL PROGETTO, IL MONTAGGIO, LA MESSA IN SERVIZIO ED IL SERVICE, SI CONSIGLIA DI RICHIEDERE IL SUPPORTO E L'ASSISTENZA DEI CENTRI SIEMENS COMPETENTI.

VID PLANERING, MONTERING, IDRIFTTAGNING OCH SERVICEARBETE ÄR DET LÄMPLIGT ATT UTNYTTJA DEN HJÄLP OCH DE TJÄNSTER SOM UTNYTTJA DEN HJÄLP OCH DE TJÄNSTER SOM KAN ERHÅLLAS FRÅN SIEMENS SERVICECENTRA.

NOTA: Per attività generali, come, ad esempio, l'accurato test del materiale consegnato (danni da trasporto), l'immagazzinaggio a lungo termine e la conservazione di macchinari, le prove di base, la stesura dei collegamenti, la messa in opera e la messa a punto dei macchinari, le norme di installazione e molti altri, sono disponibili ulteriori informazioni, contenute nelle pubblicazioni SIEMENS per il montaggio e reperibili su richiesta presso le rispettive agenzie.

OBS: För allmänna arbeten, t.ex. kontroll av mottagna leveranser (transportskador), långtidslagring och konservering av maskiner, kontroll av fundament, pådragning av kopplingar, uppställning och riktning av maskiner, installationsåtgärder etc. gäller ytterligare detaljinformation, som finns i SIEMENS monteringsanvisningar, som kan erhållas från försäljningskontoret.

⚠ **ATTENZIONE** ***Al fine di evitare guasti, è necessario fare eseguire regolarmente dal personale di servizio addestrato le prescritte operazioni di manutenzione, ispezione e revisione (vedi sopra). Variazioni rispetto al normale funzionamento (assorbimento di potenza maggiorato, temperature, vibrazioni, rumori, etc. o segnalazioni da parte dell'impianto di sicurezza) fanno prevedere che il funzionamento sia non corretto. Per impedire guasti, che possono recare direttamente od indirettamente gravi danni a persone o cose, il personale addetto alla manutenzione deve venire tempestivamente informato.***

⚠ ***IN CASO DI DUBBIO DISATTIVARE IMMEDIATAMENTE GLI UTENSILI SOSPETTI***

⚠ **VARNING** ***För att förebygga störningar måste föreskrivna underhålls-, inspektions- och revisionsåtgärder regelbundet utföras av erfaren servicepersonal. Vid iakttagelser som ej stämmer överens med normal drift (t.ex. högre effektförbrukning, förhöjd temperaturer, vibrationer, ovanliga ljud etc., eller när skyddsfunktioner löser ut) finns det anledning att misstänka att även funktionen påverkats. För att undvika störningar, som i sin tur man medföra allvarligaperson-eller materialskador, måste då ansvarig servicepersonal kallas in utan dröjsmål.***

⚠ ***KOPPLA OMEDELBART IFRÅN UTRUSTNINGEN VID VARJE MISSTANKE.***

NOTA: Si fa inoltre presente, che il contenuto del manuale e delle documentazioni relative al prodotto non fa parte di accordi, impegni o rapporti giuridici, né precedenti né attuali e che tale situazione non può cambiare. Tali impegni da parte di SIEMENS risultano nel contratto di vendita corrispondente, contenente anche certificati di garanzia completi ed autonomamente validi. Tali certificati di garanzia regolati da contratto non vengono né ampliati né limitati dalla stesura del presente manuale.

OBS: Innehållet i driftsinstruktioner och annan produktdokumentation skall inte anses ingå som en del av tidigare eller gällande överenskommelse, utfästelse eller rättsförhållande och ej heller ändrar detta. Alla förpliktelser från Siemens sida grundas på det berörda köpeavtalet, som också innehåller fullständiga och oinskränkta uppgifter rörande garantiåtaganden. Dessa avtalsenliga bestämmelser rörande garantiåtaganden varken kompletteras eller inskränks av framställningarna i driftsinstruktioner och annan dokumentation.

Herausgegeben vom / Issued by
Bereich Antriebs-, Schalt- und Installationstechnik / Drives and Standard Products Group
Elektromotorenwerk Bad Neustadt a. d. Saale (EWN)

Änderungen vorbehalten
Sous réserve de modifications
Con riserva di eventuali modifiche

Subject to change without prior notice
Sujeto a modificaciones
Förbehåll ändringar

Siemens Aktiengesellschaft

EWN-Bestell-Nr./Order No.: 610.42356/21
Bestell-Ort: EWN
Printed in the Federal Republic of Germany
AG 0790200.0 MA 6 De-En-Fr-Sp-It-Sv

FRANÇAIS

La présente fiche d'information, qui comporte les marques d'avertissement, s'inscrit en complément à la documentation du produit et doit être respectée dans tous ses points pour des raisons de sécurité.

DANGER

Les machines et appareils électriques sont des matériels destinés à être utilisés dans des installations industrielles à courant fort. Ces matériels comportent des parties actives nues et éventuellement des pièces en mouvement ou en rotation susceptibles de constituer un danger en cours de fonctionnement. Ils pourraient par conséquent occasionner des lésions corporelles très graves ou des dommages matériels importants, par exemple en cas d'enlèvement intempestif des recouvrements nécessaires, en cas d'utilisation non appropriée, en cas de manoeuvre incorrecte ou en cas de carence au niveau de l'entretien.

Il incombe par conséquent aux responsables de la sécurité de l'installation de faire en sorte

- ***que seules des personnes qualifiées soient chargées de l'exécution de travaux sur les machines ou sur les appareils,***
- ***que pour l'exécution de tous les travaux correspondants, ces personnes disposent en permanence de la notice de mise en oeuvre livrée avec le produit et des autres éléments de la documentation du produit et qu'elles soient tenues de se conformer strictement à cette documentation, et***
- ***qu'il soit interdit aux personnes non qualifiées d'exécuter des travaux sur les machines ou appareils ou à leur voisinage.***

Par PERSONNEL QUALIFIE il faut entendre les personnes qui, au vu de leur formation, de leur expérience et de leur information ainsi que de leurs connaissances des normes et règlements applicables, des prescriptions de prévention d'accidents et des conditions d'exploitation, ont été habilitées par le responsable de la sécurité de l'installation à exécuter les tâches nécessaires, et qui soient en mesure de reconnaître des dangers éventuels et de les éviter (pour les définitions relatives à la compétence des personnes, voir aussi DIN VDE 0105 ou CEI 364).
Elles doivent aussi avoir des connaissances de secourisme ainsi que de connaissances des équipements de sauvetage se trouvant sur place.
L'interdiction de confier des travaux sur des installations à courant fort à des personnes non qualifiées est réglementée, par exemple dans DIN VDE 0105 ou CEI 364.

⚠ **ATTENTION** ***Les travaux d'études et d'ingénierie de l'installation ainsi que tous les travaux de transport, de manutention, de montage, d'installation, de mise en service, de maintenance et de réparation sont supposés être exécutés par des personnes qualifiées ou sous le contrôle de personnes compétentes responsables.***
Dans ce contexte, il a lieu de:

- ***tenir compte des caractéristiques techniques et des conditions d'utilisation (conditions de montage, de raccordement, d'environnement et de service) qui figurent entre autres au catalogue, dans la notice de mise en oeuvre, sur les plaquettes signalétiques et dans les autres éléments de la documentation du produit***
- ***se conformer aux règles générales d'établissements et de sécurité,***
- ***respecter les prescriptions et contraintes locales spécifiques à l'installation,***
- ***veiller à l'utilisation adéquate des outils ainsi que des équipements de levage et de manutention,***
- ***veiller à l'utilisation des équipements de protection des personnes,***

ESPAÑOL

Esta hoja informativa con indicaciones de peligro, es complementaria a las instrucciones de servicio específicas del producto y su contenido debe observarse especialmente por razones de seguridad.

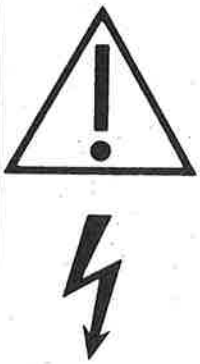

PELIGRO

Las máquinas y aparatos eléctricos forman parte de instalaciones industriales de energía eléctrica. Durante su servicio tienen algunas partes descubiertas sometidas a tensiones peligrosas, pudiendo haber otras sujetas a movimiento o rotación. Por este motivo, pueden dar origen siempre a graves daños personales o materiales si, por ejemplo, se eliminan indebidamente las cubiertas necesarias, se hace uso indebido de las mismas, se manejan erróneamente o no se practican en ellas las suficientes operaciones de mantenimiento.

Los responsables de la seguridad de la instalación tienen que garantizar que:

- ***solo se encarguen los trabajos a realizar en las máquinas y aparatos a personas calificadas***
- ***que dichas personas al realizar los correspondientes trabajos tengan siempre a su disposición y se comprometan a observar consecuentemente las instrucciones de servicio suministradas y la demás documentación específica de los productos.***
- ***Se prohiba trabajar en las máquinas y aparatos o en sus proximidades a personas no calificadas.***

PERSONAL CALIFICADO son aquellas personas que por su formación, experiencia e instrucción así como por sus conocimientos sobre las normas, determinaciones, prescripciones sobre prevención de accidentes y sobre las condiciones del servicio correspondientes, están autorizadas por el responsable de la seguridad de la instalación a ejecutar las actividades necesarias, reconociendo y evitando los posibles peligros (sobre las definiciones de personal especializado consúltese DIN VDE 0105 o CEI 364).

Entre otros, hay que tener conocimiento sobre los primeros auxilios a prestar y sobre los equipos de salvamento locales.

En las normas DIN VDE 0105 o en CEI 364 se regula la prohibición de emplear personas no calificadas para trabajos en instalaciones de energía eléctrica.

⚠ **PRECAUCION** ***Se da por supuesto que los trabajos fundamentales de planificación de la instalación así como todas las operaciones de transporte, montaje, instalación, puesta en servicio, mantenimiento y reparación corren a cargo de personal calificado y se realizan bajo el control del personal especializado responsable.***
Hay que observar especialmente:

- ***Los datos técnicos e indicaciones sobre el empleo admisible (condiciones de montaje, de conexión, del ambiente y del servicio), contenidas, entre otros, en el catálogo, en la documentación del pedido, en las instrucciones de servicio, en rótulos y en la demás documentación del producto.***
- ***Las prescripciones generales de instalación y seguridad.***
- ***Las determinaciones y condiciones exigidas específicas de la instalación y locales.***
- ***El empleo conveniente de herramientas y equipos de elevación y transporte.***
- ***El uso de los equipos de protección personal.***

– ***conditions de montage pour des appareils qui seront éventuellement mis à l'expedition en degré de protection IP00 (sans recouvrements): en service, la protection requise contre les contacts directs doit être assurée et une approche dangereuse doit être évitée.***

Pour des raisons de clarté, la documentation ne contient pas toutes les informations de détail relatives aux variantes de configuration possibles ; elle ne peut pas non plus aborder toutes les situations susceptibles de se présenter lors de l'installation, de l'exploitation et de la maintenance. D'une façon générale, la documentation ne contient donc que des informations nécessaires au personnel qualifié (voir ci-dessus), lorsque les machines et appareils sont utilisés dans des applications industrielles, conformément à l'usage auquel il sont destinés.

Si, dans un cas spécial, il serait envisagé d'utiliser les machines ou appareils dans des application non industrielles où ils feraient éventuellement l'objet d'exigences plus sévères (par exemple, protection contre les contacts des doigts d'enfant avec les pièces sous tension ou les pièces en mouvement intérieures à l'enveloppe ou autres), ces conditions doivent être garanties sur l'installation, lors du montage, par des dispositions de sécurité additionnelles.

Au cas où ces points ne seraient pas suffisamment clairs, notamment en cas d'absence d'informations détaillées spécifiques au produit, il est indispensable de contacter l'agence SIEMENS la plus proche pour obtenir les renseignements correspondants. D'une manière générale, il est nécessaire de préciser à cet effet la désignation du type de la machine ou de l'appareil et le numéro de fabrication.

EN CE QUI CONCERNE LES TRAVAUX D'INGENIERIE, DE MONTAGE, DE MISE EN SERVICE ET DE MAINTENANCE, NOUS RECOMMANDONS DE RECOURIR A L'ASSISTANCE ET AUX PRESTATIONS DE SERVICE DES CENTRES SAV SIEMENS COMPETENTS.

NOTA: En ce qui concerne les travaux généraux, par exemple le contrôle des livraisons (constatation des dommages occasionnés en cours de transport), le stockage et la conservation à long terme de machines, le contrôle des fondations, le montage d'accouplements, la mise en place et l'alignement de machines, les travaux d'installation, etc., les instructions de montage SIEMENS, qui sont disponibles dans les agences SIEMENS, fournirons de plus amples renseignements.

⚠ **ATTENTION** ***Afin de prévenir des incidents, il est nécessaire de confier à du personnel d'entretien expérimenté le soin d'exécuter régulièrement les travaux de maintenance, d'inspection et de révision prescrits (voir plus haut). Les anomalies par rapport au fonctionnement normal (puissances absorbées, températures ou vibrations plus élevées, bruits ou odeurs inhabituels, entrée en action des équipements de surveillance, etc.) laissent supposer que le fonctionnement est compromis. Afin d'éviter des incidents susceptibles d'occasionner directement ou indirectement des lésions corporelles ou des dommages matériels, le personnel compétent pour la maintenance doit être averti immédiatement.***

⚠ ***EN CAS DE DOUTE, PROCEDER IMMEDIATEMENT A LA MISE A L'ARRET DES MATERIELS CORRESPONDANTS!***

ATTENTION: Nous attirons l'attention sur le fait que le contenu de la documentation du produit ne fait pas partie d'un accord, d'une promesse ou d'un rapport juridique intérieurs ou en vigueur; elle n'a pas non plus pour objet d'y porter amendement. Toutes les obligations de SIEMENS découlent du marché conclu, qui stipule aussi les clauses de garantie complètes et valables à titre exclusif. Les présentes instructions et documentations ne sauront ni étendre ni restreindre les clauses de garantie contractuelles.

– ***Condiciones de montaje para los aparatos que pudieran haberse suministrado con el grado de protección IP00 (sin envolventes): Durante el servicio tiene que existir la protección necesaria contra contactos casuales o impedirse la aproximación peligrosa.***

Para mayor claridad, las instrucciones de servicio no incluyen todas las informaciones detalladas de las variantes constructivas posibles y, especialmente, no pueden considerar todos los casos imaginables de colocación, de servicio o de mantenimiento. Por este motivo, las instrucciones de servicio incluyen en esencia solo aquellas indicaciones que el personal calificado (véase más arriba) necesita si las máquinas o aparatos se utilizan para el fin industrial a que están destinados.

Si, en casos especiales se pretende utilizar las máquinas o aparatos fuera del ámbito industrial y hubiera que cumplir condiciones más severas (por ejemplo, protección contra contactos con los dedos de los niños o similares) estas condiciones tendrán que quedar garantizadas por parte del cliente, adicionando medidas de protección durante el montaje.

Si hubiese dudas al respecto, especialmente si faltasen detalles informativos específicos del producto, habría que establecer las aclaraciones necesarias a través de la oficina de SIEMENS competente. Se ruega fundamentalmente que, se indiquen la denominación del tipo de las máquinas o aparatos, así como su número de fabricación.

AL EFECTUAR LABORES DE PLANIFICACION, MONTAJE, PUESTA EN MARCHA Y SERVICIO SE RECOMIENDA HACER USO DE LA ASISTENCIA Y COLABORACION DE LOS CENTROS DE SERVICIO COMPETENTES DE SIEMENS.

INDICACION: Los impresos SIEMENS de montaje, que en caso necesario pueden adquirirse en las delegaciones correspondientes, contienen otras informaciones detalladas para los trabajos generales, por ejemplo, comprobación de los suministros recibidos (daños de transporte), almacenamiento prolongado y conservación de máquinas, comprobación de cimentaciones, calado de acoplamientos, emplazamiento y alineación de máquinas, operaciones de instalación y otras tareas diversas.

⚠ **PRECAUCION** ***Para prevenir perturbaciones es necesario que el personal de servicio experimentado (véase más arriba) efectúe regularmente las operaciones prescritas de mantenimiento, inspección y revisión. Las alteraciones respecto al servicio normal (mayor consumo, incremento de temperaturas o de vibraciones, ruidos u olores no habituales, actuación de los equipos de vigilancia, etc.), dan a conocer que el funcionamiento está dificultado. Para evitar perturbaciones que, a su vez, pueden motivar directa o indirectamente graves daños personales o materiales, hay que avisar inmediatamente al personal de mantenimiento competente.***

⚠ ***EN CASOS DE DUDA, DESCONECTAR INMEDIATAMENTE LOS COMPONENTES AFECTADOS.***

INDICACION: Se hace notar que el contenido de las instrucciones de servicio y de las documentaciones de los productos no son parte componente de convenios, concesiones o relaciones legales pasadas o existentes, ni pretenden modificarlas. Todos los compromisos adquiridos por Siemens resultan del correspondiente contrato de compraventa el cual contiene la regulación completa y única válida del compromiso de garantía. Las determinaciones contractuales sobre la garantía no quedan ampliadas ni limitadas por el contenido de estas instrucciones y documentaciones.

Conservazione (v. Fig. 2, 3)

Sostituire le spazzole quando vengono sostituite quelle della macchina principale. Sganciare le staffe di sostegno di 8.90, togliere i residui delle spazzole, pulire il portaspazzole ed il commutatore dalla polvere delle spazzole. Pulire la dinamo, con aria compressa ed agganciare le nuove spazzole con le staffe di sostegno (8.90).
Se il commutatore presenta delle rigature, dovrà essere ripassato. Minimo diametro esterno ammesso: 38 mm; Rz = 3...7 μm. L'isolamento tra le lamelle del commutatore va fresato accuratamente. Max. eccentricità radiale del rotore tachimetrico smontato: 0.02 mm.

Riparazione

Smontaggio della dinamo tachimetrica (v. Fig. 1, 2, 3)

Dopo aver tolto la cappa, staccato il collegamento ad innesto (V), contrassegnato i conduttori, e sganciato in direzione assiale le spazzole, si può smontare lo statore svitando le due viti a testa cilindrica M5 (8.89).
Per smontare il rotore (8.84), svitare le viti di fissagio M6 (8.85) opp. un altro elemento di fissaggio. Infilare la spina d'acciaio «G» (4,8 x 24) nell'albero del motore fino al riscontro (a protezione del centraggio sull'estremità d'albero). Al posto della vite di fissaggio opp. di un altro elemento di fissaggio avvitare una vite M8 (S) (lunghezza minima 30 mm) o viti indicato nelle istruzioni per l'uso della macchina principale. Con essa staccare il rotore della sede conica sull'albero del motore (conicità 1:10). Trattenendo l'esagono (SW 19), impedire che ruoti anche il rotore.

Montaggio della dinamo tachimetrica (v. Fig. 1)

Il rotore della dinamo (8.84) viene calettato sull'estremità d'albero conica (A) della macchina principale, come indica lo schizzo, e qui viene fissato con una vite ad esagono cavo M6 (8.85) opp. con un altro elemento di fissagio sec. i valori quotati nelle istruzioni per l'uso della macchina principale. Coppia di serraggio per (8.85) o per l'elemento di fissaggio indicato nelle istruzioni per l'uso della macchina principale; altrimenti 10 Nm. Massima oscillazione radiale del commutatore 0,04 mm.
Poi viene montato lo statore (8.86) sul bordo di centraggio dello scudo del cuscinetto (6.20) oppure sulla flangia di dispositivi eventualmente frapposti (p. es. riduttore di misura per un sincro). Le spazzole vengono applicate dopo il montaggio dello statore, agganciando in senso assiale le staffe di sostegno di 8.90 (vedere «Conservazione»). Fare attenzione ad un buon fissaggio delle staffe di sostegno.
Il sistema statore-rotore può essere combinato e sostituito liberamente.

Collegamento elettrico della dinamo tachimetrica (Fig. 3)

Mediante il collegamento ad innesto, effettuare l'allacciamento elettrico sui punti 2A1 (positivo *) e 2A2 (negativo *) sulle staffe di sostegno.

* con rotazione destrorsa dell'azionamento

Nota: Si dovrà fare attenzione che la compensazione della temperatura venga collegata in serie con il polo negativo delle spazzole. Si usino possibilmente cavetti schermati.

Vård (underhåll) (se Fig. 2, 3)

Utbyte av borstarna skall genomföras när man byter borstarna i huvudmaskinen. Borstbygeln av 8.90 demonteras, resten av borstarna avlägsnas, borstapparaten och kommutatorn rengöres från damm från borstarna, takometergeneratorn urblåses och de nya borstarna med borstbyglarna (8.90) insättes. Om kommutatorn uppvisar räfflor måste den svarvas. Minsta tillåtna ytterdiameter 38 mm; Rz = 3...7 μm. Glimmerisoleringen mellan Kommutatorlamellerna urfräses noggrant. Den avmonterade takogeneratorns största tillåtna excentricitet = 0,02 mm.

Reparation

Nedmontering av takogeneratorn (se fig. 1, 2, 3)

Ta av kåpan, lossa stickförbindningen (V), märk ledningarna och ta ur borstarna axiellt. Monterna sedan av statorn genom att de två cylinderskruvarna M5 (8.89) eller annat fästelement lossas.
Demontage av rotorn (8.84): Fästskruven M6 (8.85) urskruvas. Stålstiftet (G) 4,8 x 24 instickes till anslaget i motoraxeln (som skydd av centreringen i axeländan). I stället för fästskruven eller annat fästelment inskruvas en skruv M8 (S) (min. längd 30 mm), eller skruv enligt driftinstruktionen för den huvudmaskin, varmed rotorn lossas från den koniska sitsen på motoraxeln (kon 1:10). Genom att hålla fast av rotorn vid sexkanten (SW 19) på rotornavet förhindra att denna vrides.

Montering av takogeneratorn (se fig. 1)

Takometerrotorn (8.84) skjutes med dubbelkonaxeln på den koniska axeländen (A) hos huvudmaskinen enl. skiss och fastsättes med en insexskruv (8.85) eller annat fästelement enligt driftinstruktionen för huvudmaskinen. Dra åt skruvarna med det moment som anges i denna driftinstruktion, eller med 10 Nm, om inte annat anges. Rotationsavvikelse för kommutatorn max 0,04 mm.

Därefter monteras statorn (8.86) på centeringsflänsen hos lagerskölden (6.20) eller på flänsen hos mellanpåbyggnaderna (t.ex. växel för varvtalsgivare). Borstarna monteras efter statormontaget genom axial arretering av borstbyglarna av 8.90 (se även "Vård"). Korrekt placering av borstbyglarna beaktas.

Rotor-stator-systement kan utbytas och kombineras fritt.

Elektrisk anslutning (se fig. 3)

Den elektriska anslutningen föres över stickförbindningar till anslutningspunkerna 2A1 (plus *) och 2A2 (minus *).

* då drivanordningen roterar medurs

Obs: Observera, att temperaturkompensationen måste vara kopplad i serie med minusborsten.

Ersatzteile

Ersatzteile vom Werk lieferbar.

8.84 Tacholäufer
8.86 Tachoständer
8.87 Abdeckkappe
8.90 Kohlebürste mit Bürstenbügel
8.93 Dichtung für die Abdeckkappe
8.95 Dichtung

A Wellenende der Hauptmaschine
G Stahlstift
K Anbaumöglichkeit für Klemmenleiste
S M8-Schraube zum Abdrücken
U Anbaumöglichkeit für Kondensator
V Steckerleitungen

Spare parts

Spare parts to be ordered from our works.

8.84 Tachogenerator rotor
8.86 Tachogenerator stator
8.87 Cover cap
8.90 Carbon brush
8.93 Seal
8.95 Seal

A Shaft end of main machine
G Steel pin
K Mounting facility for terminal block
S M8 bolt for extraction purposes
U Mounting facility for capacitor
V Clip-on leads

Pièces de rechange

Peut être fourni par l'usine comme pièce de rechange.

8.84 Rotor de la dynamo tachymétrique
8.86 Stator de la dynamo tachymétrique
8.87 Capot
8.90 Balai en charbon
8.93 Joint
8.95 Joint

A Bout d'arbre de la machine principale
G Pige en acier
K Emplacement de montage pour bornier
S Vis d'extraction M8
U Emplacement de montage pour condensateur
V Conducteurs avec clip

Piezas de repuesto

Se suministra por la fábrica en calidad de pieza de repuesto.

8.84 Rotor del generator tacométrico
8.86 Estator del generator tacométrico
8.87 Caperuza
8.90 Escobilla
8.93 Junta
8.95 Junta

A Extremo de eje de la máquina principal
G Espiga de acero
K Posibilidad de montaje para regleta de bornes
S Tornillo M8 para desmontaje
U Posibilidad de montaje para condensador
V Conductores enchufables

Pezzi di riserva

Viene fornito come pezzo de ricambio dalla fabbrica.

8.84 Rotore della dinamo
8.86 Statore della dinamo
8.87 Cappa
8.90 Spazzola di carbone
8.93 Guarnizione
8.95 Guarnizione

A Estremità d'albero della macchina principale
G Spinotto d'acciaio
K Per eventuale montaggio della morsettiera
S Vite M8 per estrazione
U Per l'eventuale montaggio del condensatore
V Cavetto ad innesto

Reserdelar

Kan beställes som reservdel från fabriken.

8.84 Takorotor
8.86 Takostator
8.87 Kåpan
8.90 Kolborste
8.93 Tätning
8.95 Tätning

A Axelände hos huvudmaskinen
G Stålstift
K För påbyggnad av kopplingsplint
S M8-skruv för avdragning
U För påbyggnad av kondensator
V Ledningar med stiftkontakt

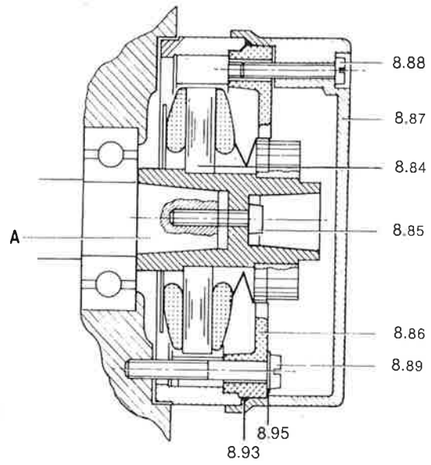

Fig. 1

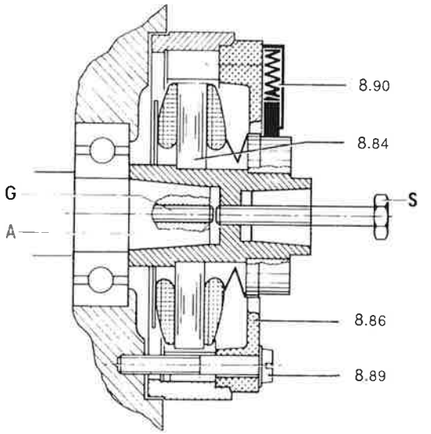

Fig. 2

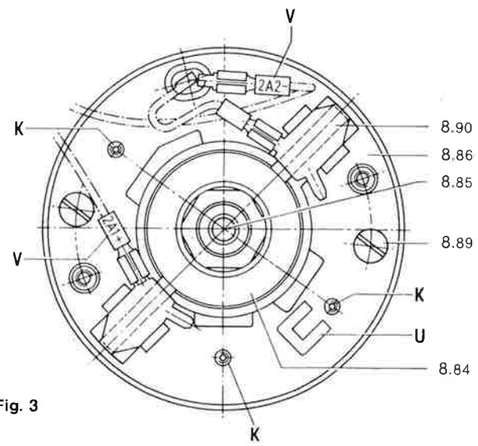

Fig. 3

D = Diese Dichtflächen sind bei Montagearbeiten vor dem Wiederzusammenbau zu reinigen und mit Fluid D oder einem gleichwertigen Dichtmittel zu bestreichen, sonst keine Gewährleistung der Schutzart IP 55.

D = During servicing, these surfaces should be cleaned and coated with Fluid D or an equivalent sealing compound before reassembly, otherwise there can be no guarantee of type of protection IP 55.

D = afin de restaurer le degré de protection IP 55 lors du réssemblage, nettoyer ces surfaces et les enduire de Fluid D ou d'un produit d'étanchéité équivalent.

D = Antes de esamblar, durante los trabajos de montaje, se limpiarán estas superficies de junta y se untarán con Fluid D o con un producto similar, ya que de omitirlo, no queda garantizado el grado de protección IP 55.

D = Durante i lavori di montaggio, prima di esser rimontate, queste superfici di tenuta devono esser pulite e spalmate con Fluid D oppure una sostanza idonea. Altrimenti non può esser garantita la protezione IP 55.

D = Dessa tätningsytor måste vid montagearbeten före återinbyggnad rengöras och instrykas med Fluid D eller likvärdigt tätningsmedel. I annat fall kan skyddsform IP 55 ej garanteras.

	Fluid D
Lieferant:	
Supplier:	
Fournisseur:	Fa. Teroson
Proveedor:	D-6900 Heidelberg
Fornitore:	
Leverantör:	

Normteile sind nach Muster im freien Handel zu beziehen.

The standard parts can be procured according to samples from local dealers.

Les pièces normalisées se trouvent dans le commerce sur présentation d'un échantillon.

Las piezas normalizadas, según muestra, pueden adquirirse en el comercio.

Le parti sono normalizzate e reperibili secondo campione in commercio.

Normerad del kan erhållas i fria handeln enl mönster.

8.85 DIN 6912

8.88
8.89 DIN 84

8.94 DIN 46320

Anziehdrehmoment Tightening torque Couple de serrage Par de apriete Coppia di serraggio Åtragningsmoment	1,5 – 2 Nm

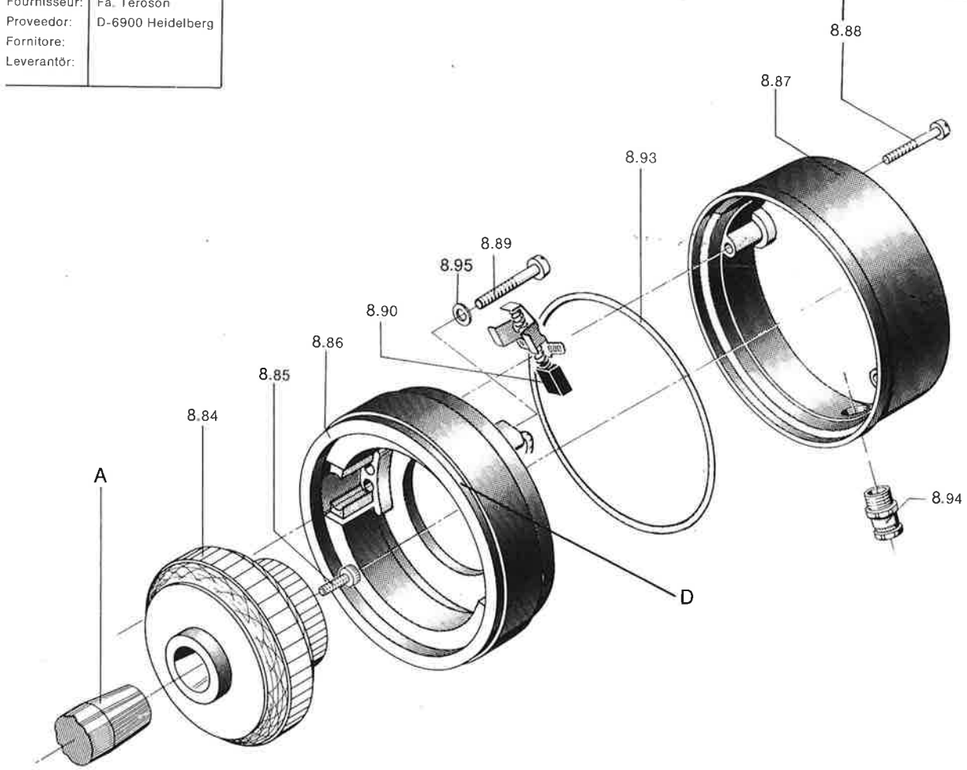

Herausgegeben vom / Issued by
Bereich Antriebs-, Schalt- und Installationstechnik / Drives and Standard Products Group
Elektromotorenwerk Bad Neustadt a. d. Saale

Änderungen vorbehalten
Sous réserve de modifications
Con riserva di eventuali modifiche

Subject to change without prior notice
Sujeto a modificaciones
Förbehåll för ändringar

Siemens Aktiengesellschaft

EWN-Bestell-Nr./Order No.: 610.41174/21 e
Bestell-Ort: EWN
Printed in the Federal Republic of Germany
AG 04915.0 MA 8 De - En - Fr - Sp - It - Sv

ANALOGUE REGULATION ELECTRONICS FOR MOTOR CONTROL UNITS

REG-3

Contents

Chapter	Title	Page
1.	Application	3
2.	Characteristics	3
3.	Setting functions	3
4.	Jumper	4
5.	Reading	4
6.	Indication exits	4
7.0.	Technical datas	4
7.1	Connections X1	5
7.2.	Plug-in terminals X2	5
7.3.	Connectors X3	5
7.4.	Connectors X4	6
7.5.	Layout overview	6
8.0.	Connection instructions	7
8.1.	Enable	7
8.1.1.	Enable by relay contacts	7
8.1.2.	Enable using external voltage	7
8.2.	Nominal speed value 8	
8.2.1.	Nominal value using internal voltages	8
8.2.2.		
8.2.3.	Nominal value from SPS or CNC	8
8.2.4.	Nominal value current	9
8.2.5.	Auxiliary nominal value	9
8.2.6.	Current nominal value in/output	9
8.3.	Current limits	9
8.3.1	The current limit using internal voltage	10
8.3.2.	Current limit from SPS or CNC	10
8.3.3	Current limit by means of current loop	10
8.4.	Actual speed value 11	
8.4.1.	Actual tachometer value	11
8.4.2.	Actual armature voltage value	11
8.5.	Ready signal	12
8.6.	Output signals	12
8.6.1.	Tachometer error	12
8.6.2.	Overload	12
8.6.3.	Standstill	12
8.7.1.	Speed indicator	13
8.7.2.	Current indicator	13
9.0.	Settings	13
9.1.	Speed	13
9.2.	Integrator	13
9.3.	PI-settings	14
9.3.1.	P-component	14
9.3.2.	I-component	14
9.3.3.	D-component	14
9.3.4	Amplication	15, 16
9.4.1	Depiction of the regulation setting	16
9.4.2	Depiction differentation of the actual	17
9.4.3	Adjustment without means of measurement	17
9.5.1.	Actual value tachometer	18
9.5.2.	Actual value armature voltage	18
9.6.1.	Internal current limit	19
9.6.2.	External current limit	19
9.6.3	Constant current limit	19
9.6.4.	Commutation limit	20

1. APPLICATION

Regulation electronics used for regulating thyristor and transistor motors in 1Q and 4Q operations.
It can be employed for regulating speed (tachometers or armature voltage with IxR compensation), torque or combined speed-torque.

2. CHARAC-TERISTICS

* differential input amplifier
* slope limitor (the integrator is adjustable)
* regulates the speed (RVU) with PI-switching system
* input of the actual difference value
* output of the nominal current value
* static and dynamic current limit
* current and commutation limit depending on the speed
* highly ohmic input of the armature voltage
* forced setpoint value
* enable logic
* solderless adjustment
* bus controller
* possible options : Multi1,Multi2,Multi4,Supi1 (Interbus)

3. SETTING FUNCTIONS

Function	Component
Tachometer for the actual adjustment value	binary switch S9 potentiometer P4 (n-max)
Armature voltage of the actual adjustment value with IxR compensation	potentiometer P4 (nmax) potentiometer P2 (IxR)
internal current limit (1Q only P6)	jumper S13, S14 potentiometer P5 (Imax-1) potentiometer P6 (Imax-2)
External current limit	potentiometer P5 (Imax-1) potentiometer P6 (Imax-2)
Constant current Integrator	potentiometer P7 (ID) jumper S2 potentiometer P1 (INT)
Amplification P component	binary switch S4 P3 (Xp), Jumper S15
Amplification I component	binary switch S5
Amplification D component	binary switch S8
Commutation limit	resistor R111, R112
Zero adjustment (n-min with 1Q)	potentiometer P8 (Offset)

4. JUMPER

Function	Jumper Number
nominal input value - circuitry reference zero	S6
tachometer regulation	S7, S12
tachometer smoothing	S11
armature voltage regulation	S10
IxR compensation	S1
internal current limit 1	S14
internal current limit 2 (1Q)	S13
with integrators	S2
without integrators	S3
amplification 1:1 (torque regulation)	S15
tachometer monitoring	S16 Pos.2-3
over current timingof 1second	S18
delayed control blockage (quick stop)	S19
actual current value	SW1 Pos.2-3
integral-disconnection (switch-off)	SW1 Pos.1-2

Jumper plugged with the given funktion

5. READING

Function	Luminescent diode No.
nominal enable value speed and current	LED 1
controller enable	LED 4
ready signal	LED 26
speed controller output +	LED 6
speed controller output -	LED 7
overload	LED 8
standstill	LED 9
tachometer error	LED 24

The LEDs lighten up according to the given funktion

6. INDICATION EXITS

Function	Terminal Number
ready signal	X2:105 - X2:106
tachometer error	X2:107
overload	X2:108
standstill	X2:110
speed (actual n value)	X2:109
current (actual I value)	X2:111

When in good condition, the output signals supply >15V/6mA

7.0. TECHNICAL DATAS

Technical datas		
Connection voltage	+24V, 8.5mA	X3:1
without external consumer	+15V, 25mA	X3:3
	-15V, 17mA	X3:7
nominal auxiliary voltage	+/- 10V, 10mA	
Output signals	+24V, 6mA	

7.1 CONNECTIONS X1

Function	Terminal Number
input/output of the nominal current value	X1:1
addition - nominal-value speed controller	X1:2
+ 24 Volt (for the enable)	X1:3
enable input (+10..+30 Volt)	X1:4
+ 10 Volt (for the nominal value)	X1:5
nominal value - input (signal)	X1:6
- 10 Volt (for the nominal value)	X1:7
nominal value - input (GND)	X1:8a
device ground (GND)	X1:8
tachometer input (GND)	X1:8b
tachometer input (signal)	X1:9

7.2. PLUG-IN TERMINALS X2

Function	Terminal Number
+ 10 Volt (for the current limit)	X2:101
external current limit I1	X2:102
external current limit I2	X2:103
device ground (GND for current limit)	X2:104
ready signal	X2:105
ready signal	X2:106
tachometer error signal	X2:107
overload signal	X2:108
speed (n-actual)	X2:109
standstill signal	X2:110
current (I-actual)	X2:111

7.3. CONNECTORS X3

Function	Connector number
+ 24 Volt +/- 10 %	X3:1 and 2
+ 15 Volt +/- 2 %	X3:3 and 4
-24 Volt +/- 10 %	X3:5 and 6
- 15 Volt +/- 2 %	X3:7 and 8
device ground GND	X3:9,10,11,12,13,14
nominal I value (GND) 0	X3:15
nominal I value (signal) +/- 10 V =	X3:16
current controller enable + 15 V =	X3:17
Interlock direction + 10 V -	X3:18
Interlock direction + 10 V =	X3:19
n-actual + 5 V =	X3:20
I-actual + 10 V =	X3:21
Overcurrent-power unit n. c.	X3:22
ignition phase 1 : +10 V =	X3:23
ignition phase 2 : + 10 V =	X3:24
ready signal + 10 V =	X3:25
free n. c.	X3:26

7.4. CONNECTORS X4

Function	Connector Number
+ 24 Volt	X4:1 and 2
+15 Volt	X4:3 and 4
- 24 Volt	X4:5 and 6
- 15 Volt	X4:7 and 8
device ground GND	X4:9 and 10
enable	X4:11
n nominal before the diff. amplifier	X4:12
n nominal after the diff. amplifier	X4:13
n nominal after the in tegrator	X4:14
I nominal	X4:15
n actual (after the divider)	X4:16
free	X4:17
current limit I1	X4:18
current limit I2	X4:19
I actual	X4:20
constant curent limit ID	X4:21
n actual (after rectifier)	X4:22
tachometer error	X4:23
overload : X4:24 standstill	X4:25
n.c.	X4:26

7.5. COMPONENT LAYOUT OVERVIEW

Where to find the most important components.

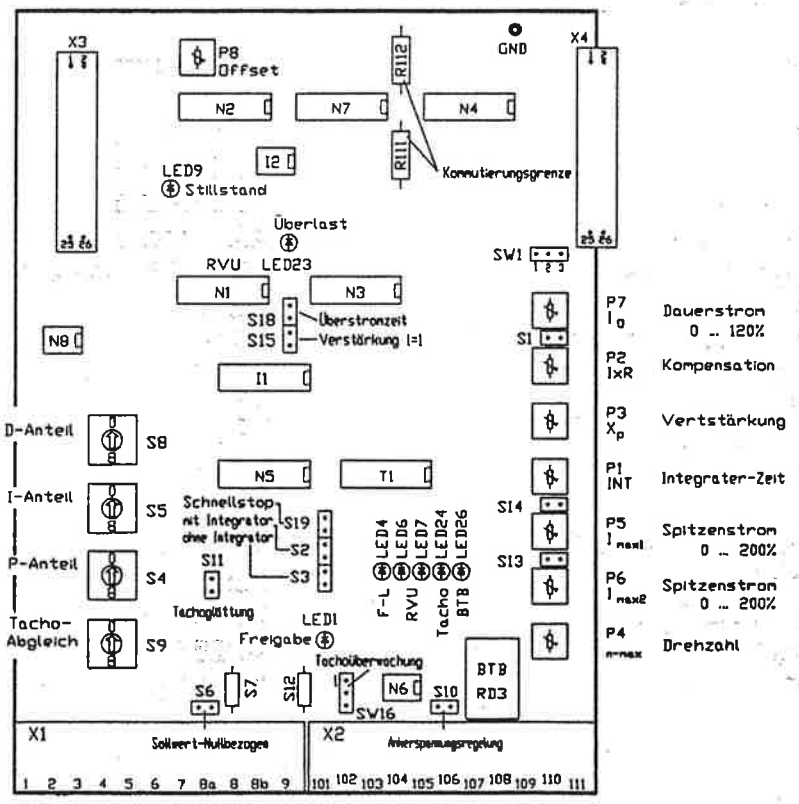

8.0. CONNECTION INSTRUCTIONS

The connection instructions are solely as general information and are not definitive. Local regulations and the connection/ operating instructions of the basic device (e. g. the thyristor motor controller Q1-xx) are to be observed.
As interference on the nominal and actual current lines reducesthe control range as well as the control accuracy, these lines must be shielded and laid out separately from the main current lines.

8.1. ENABLE

Connecting X1:3 to X1:4 or by setting a voltage higher than + 10 V the nominal value and the speed controller (RVU) are enabled without delay. By opening the contact/switching off the enable voltage, the nominal value will be immediately pulled to 0 and the speed controller disabled after 5 seconds (quick stop) or the nominal value and the blockage are switched simultaneously. The function can be chosen with jumper S19.

S19 plugged = delayed control blockage
S19 open = undelayed control blockage

8.1.1. ENABLE BY CONTACT(S)

Output X1:3 = 24 V/6mA
Input X1:4 = input resistance 4 kΩ

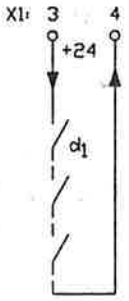

Caution:
lay out the relay contacts for 6mA.
Use only gold or reed contacts.

8.1.2. ENABLE VOLTAGE

Input X1:8 = GND
Input X1:4 = Enable
input resistance 4 kΩ

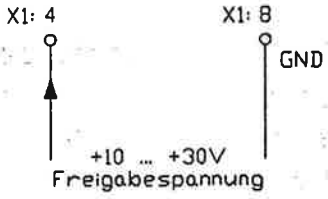

Enable voltage from an SPS or CNC
+ 10... + 30 Volt (nominal +24 V/6mA).
If using relay contacts in the enable line,
please pay attention that the appropriate contacts are used.

8.2. NOMINAL SPEED VALUE

The nominal input value X1:6 is set for a nominal voltage value of +/- 10 Volt. In 1Q operation 0.. + 10 V, in 4Q 0.. +/- 10 V. The nominal value can be either generated by employing the internal connection voltages of + 10 (X1:5) and - 10 V (X1:7) or by using a nominal voltage value of an SPS or a CNC system. The input resistance is 50 k. Switching contacts within the nominal value ernal nominal value supply, it is important that the jumper S6 is set.
Having jumper S6 pulled, the actual value input will be switched as a differential amplifier.

8.2.1. NOMINAL VALUE USING INTERNAL VOLTAGES

Output X1:5 = + 10 Volt/5 mA
Output X1:7 = - 10 Volt/5 mA
Output X1:8a = device ground GND
Input X1:6 = nominal value 0.. +/- 10 Volt

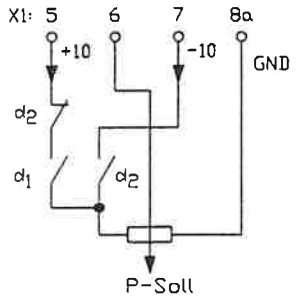

Reversing the rotation direction is achieved by means of contacts d1 and d2. Stop is when d1 and d2 are open. Speed adjustment is fixed with the potentiometer P-nominal. Potentiometer resistance from 5 up to 10 kΩ. Nominal value voltage 0..+/- 10 Volt
Jumper S6 closed.

1Q

Output X1:5 = + 10 Volt
Output X1:8a = device ground GND
Input X1:6 = nominal value 0.. + 10 Volt

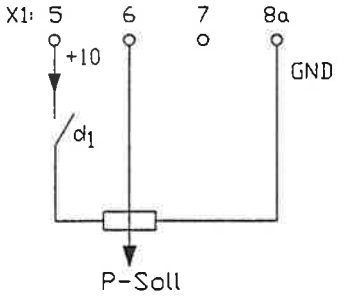

Stop with d1 open, speed adjustment with potentiometer P-nominal. Resistance from 5 up to 10 kΩ.
Jumper S6 closed.

8.2.3. THE NOMINAL VALUE OF SPS OR CNC

Input X1:6 = nominal value input
Input X1:8a = nominal value
Voltage X1:6 - X1:8a 0..+/- 10 Volt
Input resistance 50 kΩ
Jumper S6 open = differential input
Jumper S6 closed = X1:8a=GND

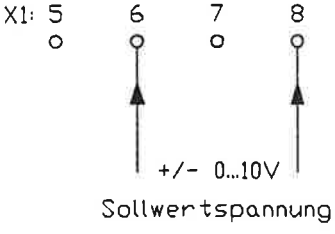

8.2.4 NOMINAL VALUE CURRENT

In order to transform a nominal value current from 0 up to 20 mA, a resistor R1 of 500Ω has to be connected between X1:6 and X1:8a.

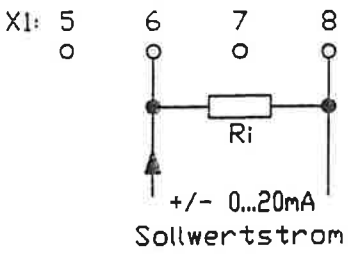

8.2.5. AUXILLARY NOMINAL VALUE

At connection X1:2 a correction value of max. +/- 10 Volt can be used. The input resistance is 100 kΩ. Using the same polarity as X1:6 (nominal value) the correction value will be added.
Jumper SW1 pos. 2-3

8.2.6. CURRENT NOMINAL VALUE

To set up parallel currents in several devices, the terminals X1:1 and X1:8 of the devices should be connected parallel. The master device takes over the speed regulation and the slave devices receive the same nominal current. The IC N2 must be removed from the slave devices. Terminal X1:1 must be switched onto the actual current value with the jumper SW1 (Pos. 2-3)

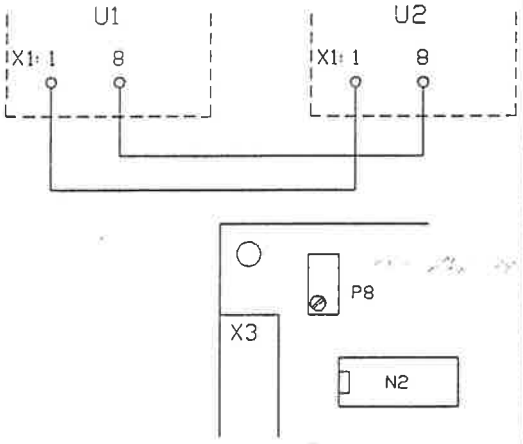

8.3. CURRENT LIMITS

The current limitors can be adjusted on the potentiometers P5 (Imax 1) and P6 (Imax 2) between 0 and 200 % type current, if the jumpers S13 and S14 are plugged. With an external current-limiting adjustment or regulation the jumpers S13 and S14 must be open.
The current limits can be adjusted in 1Q-operations only P6 (Imax 1) an P6 (Imax 2).

The current limits can be set from 0 up to 200 % by using a voltage of 0 to + 10 V at the input X2:102 for thecurrent limit 1 and X2:103 for the limit 2. For adjustment using external potentiometers or voltage dividers, X2:101 (+10) GND at X2:104 can be used. This external value can be reduced with the potentiometer P5(Imax1) and P6(Imax2).

8.3.1. CURRENT LIMITS USING INTERNAL VOLTAGE

Output	X2:101	= + 10 Volt
Input	X2:102	=current limit I1, 0..+ 10 V
Input	X2:103	= current limit I2, 0..+ 10 V
Output	X2:104	=device ground GND

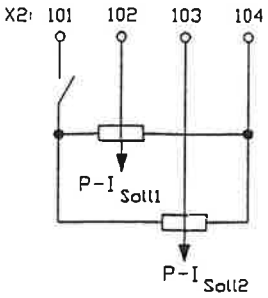

Jumper S13 and S14 are not plugged.
The current limit I1 is adjusted with the potentiometer P-I_{Soll1} and the current limit I2 with the potentiometer P-I_{Soll2}.
Using 1Q-operations only the current limit I2 (input X2:103) is active.

8.3.2. CURRENT LIMIT FROM SPS OR CNC

Input	X2:102	= current limit I1, 0..+ 10 V
Input	X2:103	= current limit I2, 0..+ 10 V
Output	X2:104	= device ground GND

Input resistance 50Ω

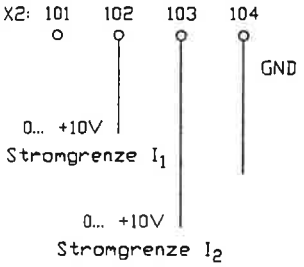

Jumpers S13 and S14 are **not** plugged.
The current limits are controlled by the voltages at X2:102 and X2:103.

8.3.3. CURRENT LIMIT BY MEANS OF CURRENT LOOP

With an external control current of 0..20 mA for the current limit, the external load resistances of 500 Ω must be connected.
Jumpers S13 and S14 are **not** plugged

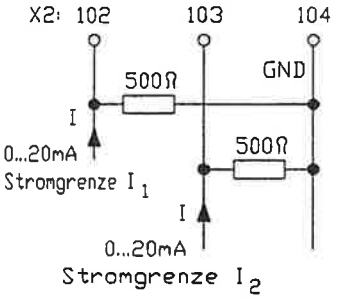

8.4. ACTUAL SPEED VALUE

Only suppliers with a dc voltage dependent on the direction can be employed as actual speed value suppliers for the 4Q operation. The best regulation results are achieved with dc tachometers. With the 1Q operation dc tachometers as well as 3-phase current tachometers with rectification can be used. The maximum suitable tachometer voltage is +/- 200 Volt. Using alternating current tachometers with a rectifier, an additional smoothing capacitor of 0,47 mF ist to be set up at the tachometer input and the monitorig of the tachometer has to be switched off.

8.4.1. ACTUAL TACHOMETER VALUE

Input X1:8b = tachometer (GND)
Input X1:9 = tachometer (signal)
0Ω - Jumper S7, S12 plugged.

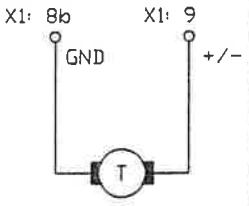

The tachometer input X1:9 must have an oppositional polarity to the nominal value input X1:6.
The tachometer voltage is
adjusted with the binary switch S9 (See chapter "Settings").
With the jumper S11 a smoothing capacitor (0.1 µF) can be connected.

8.4.2. ACTUAL ARMATURE VOLTAGE VALUE

With an armature voltage regulation with the IxR compensation the armature voltage UA is connected to the tachometer input X1:8b and X1:9. Please pay attention that the jumpers are as follows : 0Ω-bridges S7 und S12 open , jumpers S1,S10 plugged and SW16 in position 1-2.

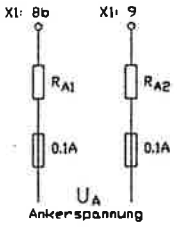

The input is set for an maximum armature voltage of 180 Volt. With any higher voltage, external resistors must be attached. The values for RA1 and RA2 are:

270V = 200kΩ
440V = 470kΩ
550V = 680kΩ

The leads must be protected with 0.1A fuses directly at the power pick-up (take-off). The leakage current versus the protective earth is <1 mA.
For the mounting of the external resistors and fuses, an additional board, EXZU-UA1, is available.
Potential-free armature volatge control by means of a potential separating amplifier (QTV) can be connected like the tachometer control and the rotary switch S9 set onto position F.

8.5.1.
READY
SIGNAL

The signal contact (ready for operation) is closed when the internal supervision of the power section does not indicate any error. The contact informs the SPS or the CNC that the motor controller is ready for operation.
The contacts are laid out for 125 V/0.5A

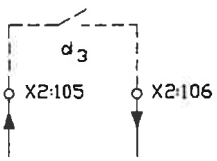

8.6.
OUTPUT
SIGNALS

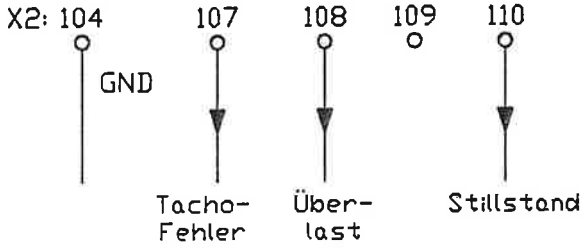

The output signals are wired break-proofly. This means, that in the case of an error the signal switches to zero and that it otherwise supplies + 15 Volt. The signals can be charged with 6 mA. Error signals are **not** memorized internally.

8.6.1.
TACHOMETER
ERROR

When the tachometer is interrupted or not connected, the voltage at the output X2:107 is 0 Volt. Polarity and voltage errors cannot be detected. Tachometer errors are shown with LED 24. In the case of armature voltage regulation and alternating current tachometers with a rectifier the jumper S16 Pos.1-2 must be plugged. Thereby the tachometer monitoring is switched off.
Caution: When using tachometer generators with high voltage or high wrapping induction, the tachometer monitoring can respond without that the tachometerline ist interrupted. When this is the case, a capacitor with 0,1 µF/400 V has to be built in between the terminals + and - of the tachometer.

8.6.2.
OVERLOAD

When the drive is overloaded or blocked, the output X2:108 switches from >+24 to 0 Volt after about 5 seconds.
The overload/overspeed is indicated with the LED23.

8.6.3
STANDSTILL

With a speed of 1 % the output X2:110 switches from >+ 24 Volt to 0 Volt.
The stillstand is indicated with LED 9.

8.7.1. SPEED INDICATOR

A speed indicator can be connected to the plug-in terminal X2:109.
The output voltage for +/- 100 % of speed is +/- 5 Volt.
The output resistance is 1 kΩ.

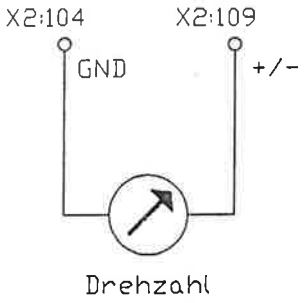

8.7.2. CURRENT INDICATOR

An indicator for armature current can be connected to the terminal X2:111.
The output voltage for +/- 200 % type current is +/- 5 Volt.
The output resistance is 1 kΩ.

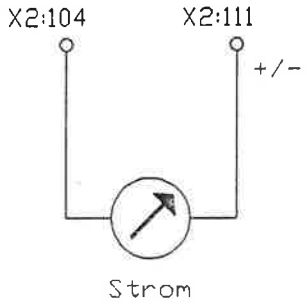

9.0. SETTINGS

9.1. SPEED

The nominal input can be used as a switch for the difference input or for the input amplifier with reference point zero. The choice is made with the plug jumper S6.

S6 plugged = input with reference point zero
(X1:8a connected with X1:8 GND)
S6 open = difference input

Amplification of the input amp he difference amplifier at X4:13.

9.2. INTEGRATOR

The integration time of the slope limit is adjusted with the potentiometer P1 (INT). When turning the potentiometer clockwise, the time until the entire nominal value is reached at the output is prolonged.
The time constant of the trimmer's anti-clockwise stop = 0.15 s
The time constant of the trimmer's clockwise stop = 5 s
The function of the integrator can be measured with the logic enable closed at the connector X4:14.
The nominal value input is switched onto the speed control loop with or without integrating function by plugging the jumpers S2 or S3.
S2 plugged, S3 open = with integrator
S3 plugged, S2 open = without integrator
When turning off the enable, the integrator function will be canceled.

9.3 PI-SETTINGS

Both, the proportional as well as the integration component of the speed control loop are adjusted by means of three binary switches with each 16 positions and by means of the amplifying trimmer P3 (XP). With the jumper S15 the amplification of the speed controller can be switched onto 1:1. (torque regulation by using the speed controller) By exchanging the REG board the setting values can be taken over.

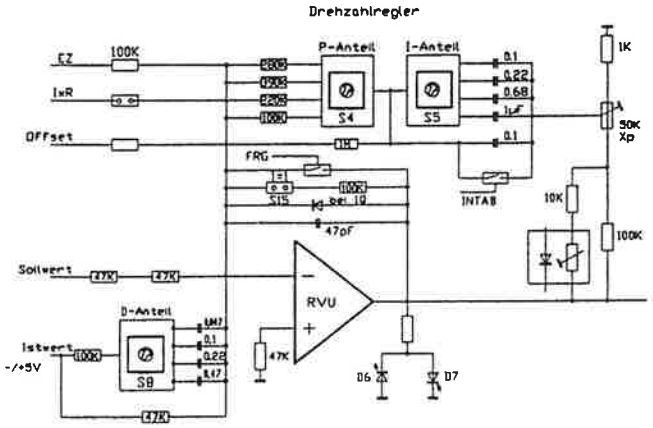

9.3.1. P-COMPONENT

Adjustment of the P-component with the binary switch S4.

Schalter S4

Stellung	0	1	2	3	4	5	6	7
R-Wert	1000	450	280	209	180	148	123	107 kΩ
Stellung	8	9	A	B	C	D	E	F
R-Wert	90	82	73	67	64	59	55	52 kΩ

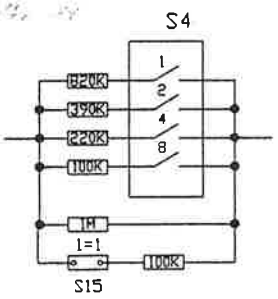

9.3.2. I-COMPONENT

Adjustment of the I-component with the binary switch S5.

Schalter S5

Stellung	0	1	2	3	4	5	6	7
C-Wert	0.1	0.2	0.3	0.4	0.8	0.9	1.0	1.1 µF
Stellung	8	9	A	B	C	D	E	F
C-Wert	1.1	1.2	1.3	1.4	1.8	1.9	2.0	2.1 µF

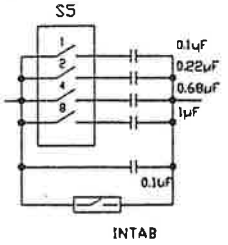

9.3.3 D-COMPONENT

Adjustment of the D-component with the binary switch S8

Schalter S8

Stellung	0	1	2	3	4	5	6	7
C-Wert	0	0.047	0.1	0.15	0.22	0.27	0.32	0.37 µF
Stellung	8	9	A	B	C	D	E	F
C-Wert	0.47	0.52	0.57	0.62	0.69	0.74	0.79	0.84 µF

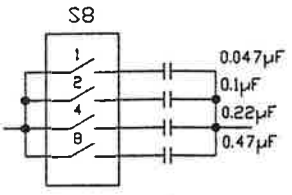

9.3.4
AMPLIFICATION

The prontional amplification of the speed control can be adjusted with the switch S4 und the potentiometer P3 (Xp).
Due to the n-adaptation the amplification will be reduced when the speed increases.

The diagrams show the following amplification adjustments:

Picture 1
Amplification adjustment
Switch 5

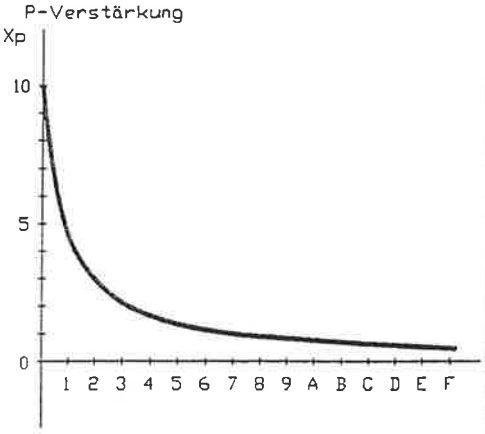

Picture 2
Amplification factor - Fxp
Adjustment with
the Xp - Potentiometer P3

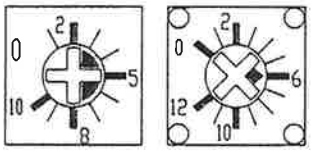

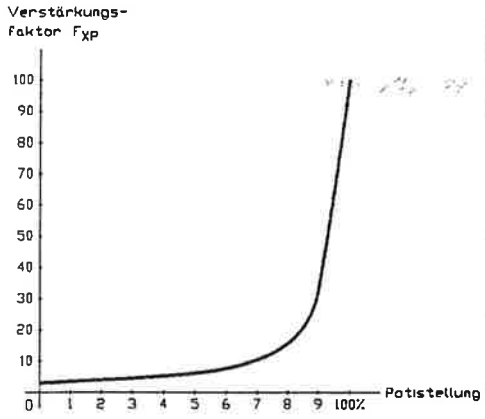

Picture 3
Amplification reduction
with the n - adaption

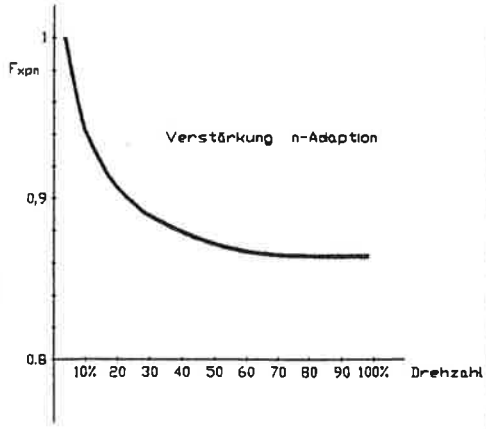

P - Amplification = Xp x Fxp x Fxpn

9.3.4
AMPLIFICATION

In order to optimise the P-amplification the I-component can be shorted by putting the jumper SW1 onto Position 1-2 and by connecting the terminal X1:1 with X1:8.
With an nominal value step of about 10% the control response is measured at X4:16 with the oscilloscope and the amplification is optimised by adjusting S4 and P3.

9.4.1
DEPICTION OF THE REGULATION

Picture4
The diagrams (picture 5,6,7) show the effects of the amlification adjustments with

switch S4 (P-amplifikation)
switch S5 (I-component)
potetiometer P3 (Xp-amplification factor)

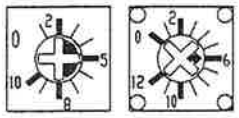

In a static condition (without a motor) 0.2V is given as nominal value. The enable is turned on at time 0.
The control answer is measured as a voltage at X4:15.

Picture 5
Modification effects
Switch S4 P - amplification

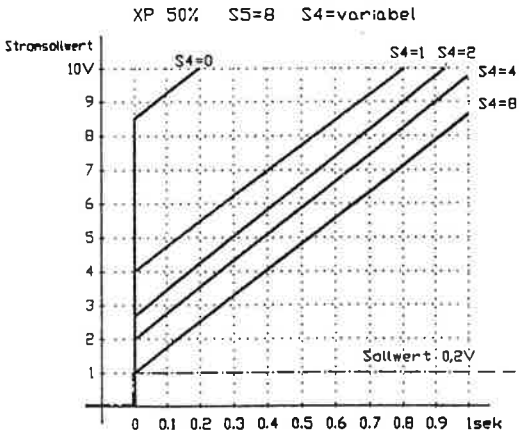

Picture 6
Modification effects
Switch S5 I - component

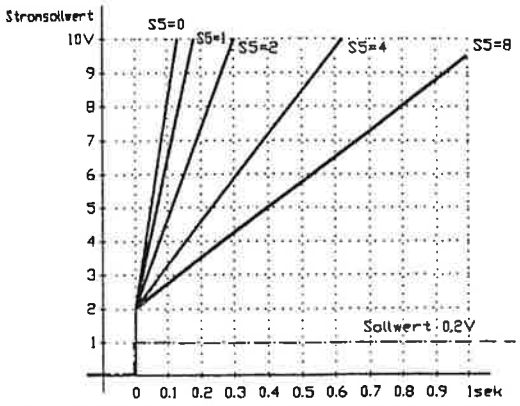

Picture 7
Modification effects
Xp - Potentiometer

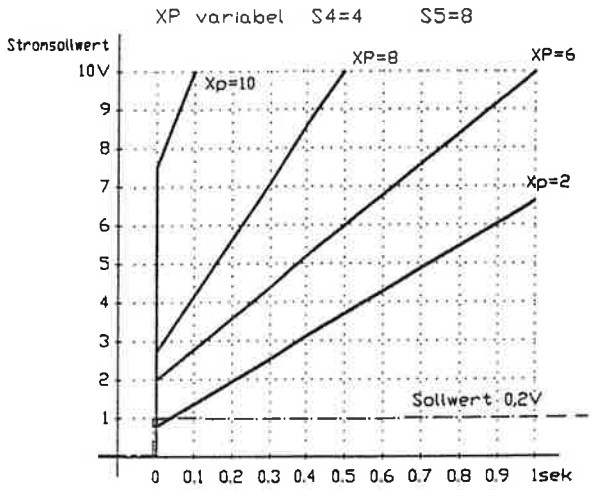

The diagrams show that the adjustment of the Xp - potentiometer P3 alters the P-amplification as well as the integral - component drastically.

The effect of the actual value differential component is measured by means of a step function with the motor connected.
Adjust switch S8 such that the drive will not overshoot on receiving a 50% step nominal value.

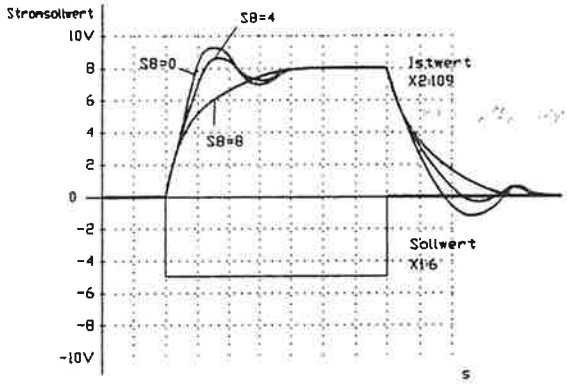

9.4.2 DEPICTION DIFFERENTATION OF THE ACTUAL VALUE

9.4.3 ADJUSTMENT WITHOUT MEANS OF MEASUREMENT

Connect the motor, nominal value 0, Xp = 80%
Switch S4 = Position 8
Switch S5 = Position 4
Switch S8 = Position 0
Enable the controller, turn the swich S4 counter - clockwise until the drive overshoots.
Turn Xp counter - clockwise until the oscillation stops, then turn the Xp - potentiometer another 2 mrkings to the left (counter - clockwise).
Adjust switch S5 such that the drive runs smoothly after two oscilation on receiving a 50% (5V) step nominal value.

9.5.1. ACTUAL VALUE TACHOMETER

For the speed regulation with the actual tachometer value the 0 Ohm resistors S7 and S12 must be present and the jumper S10 open. The tachometer signal at X1:9 must be of an opposite polarity to the actual input X1:6 !
Use the binary switch S9 for a coarse adjustment .The fine adjustment of the maximum speed at maximum nominal value input is achieved with the trimmer P4 (n-max).
The tachometer signal can be smoothed by closing the jumper S11 with a capacitor of 0.1µF.
With alternating current tachometers an additional smoothing capacitor of 0,47 µF ist to be placed at the tachometer input.

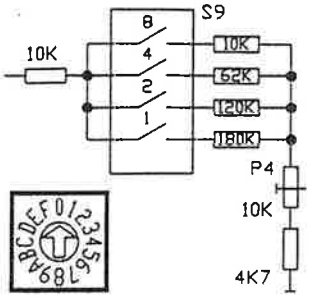

Schalter S9
Einstellung Tacho - Grobabgleich

Stellung	0	1	2	3	4	5	6	7	8	9 bis F	POTISTELLUNG n_{max}
Tacho-spannung	∞	67	40	32	25	23	20	18	14	12V	min
min		100	70	50	40	35	30	25	18		mitte
		205	145	97	85	70	65	55	35		max

9.5.2. ACTUAL VALUE ARMATURE VOLTAGE

For speed regulation with the armature voltage as actual value the following settings are important :

Jumper S1,S10 : closed , Jumpers S7 and S12 : open.
Jumper SW16 on position 1-2, Switch S9 : position 0.

With an armature voltage of greater 180 Volt external resistors have to be attached at the inputs X1:8b and X1:9.
The values are as follows:

for 270 V = 200 kΩ
for 440 V = 470 kΩ
for 550 V = 680 kΩ

The fine adjustment of the maximum speed with maximum nominal value input is achieved with the trimmer P4 (n-max).
The dropping of the speed IxR is compensated by the trimmer P2 (IxR) in such a way, that with low speeds and a 50 % load jump the speed does not drop into idle running.
The tachometer monitoring ist disconnected by plugging in jumpers S16.

9.6.1.
CURRENT LIMIT INTERNAL

Jumper S13, S14 must be closed.
The peak current can be set separately for both current directions with the trimmers P5 (Imax1) and P6 (Imax2) between 0 and 200 % type current. Clockwise for maximum current
By using 1Q-operation only P6 (Imax2) ist active.

9.6.2.
CURRENT LIMIT EXTERNAL

The jumpers S13 and S14 have to be open.
The current limit can be set with an external voltage at X2:102 (Imax1) and at X2:103 (Imax2) max 10V .The external signal can be reduced with the internal trimmer P5 (Imax1) and P6 (Imax2).
The torque is set at the inputs X2:102 and X2:103 when using a combined speed-torque regulation.

9.6.3
CONSTAND CURRENT LIMIT

The constant current is set for both torque directions with the trimer P7 (ID) between 2 and 100 % nominl current.
The resetting time of the current limit from peak to constant current is dependant on the previous demand of constant current. This means, that a long peak current time (about 5 seconds) is available when demanding little current and that by employing a high constant current (80 % type current) the peak current time is reduced down to about 1 second to prevent overheating
The peak current time for disc-motors can be decreased by factor 5 with jumper S18.

9.6.4.
COMMUTATION LIMIT

The commutation limit has to be respected when using direct current motors with a permanent excitation (no field) and iron core. The limiting curve of the suitable motor current dependant on speed, is indicated in the data sheets for motors.
Concerning motors, the maximum torque, which corresponds to the maximum current, comes up to 3 to 6 times the value of the constant torque. It is double the value with servo-amplifiers.
Take this motor curve here as an example. The linear limit characteristic of the servo-amplifier must be within the motor characteristic. The limiting line for amplifiers is marked at 2x Inenn (which corresponds to 10 V nominal current value). The straight reduction line is then placed tangentially to the motor characteristic. The straight line is defined as

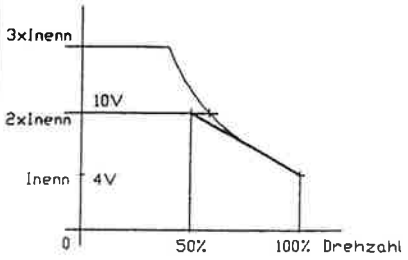

$$S = V / \%n$$

value S = V current change / % torque change

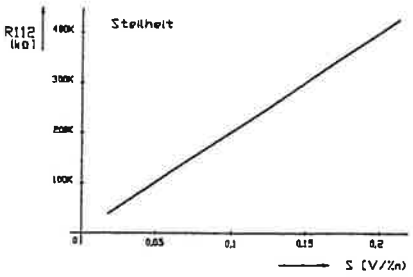

The values for the example given are:

insertion point = 50 %
speed slope = 6/50 = 0.12 V/ %n

The option commutation limit is set with the resistances R111 and R112. At first the resistance R112 for the slope is fixed, then the resistance R111 for the insertion point is derivated.

Example: R112 = 220 kΩ
R111 = 8.2 kΩ

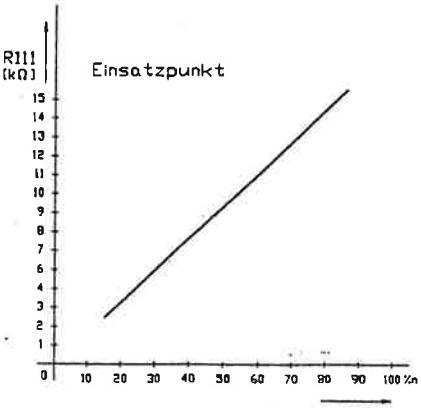

The adjustment can be controlled by introducing a direct current voltage which corresponds to the tachometer voltage at the tachometer input and by measuring the reduction of the nominal current value at X4:15 (10 V = 2x Inenn).
The values are good for a nominal value of 10 V.

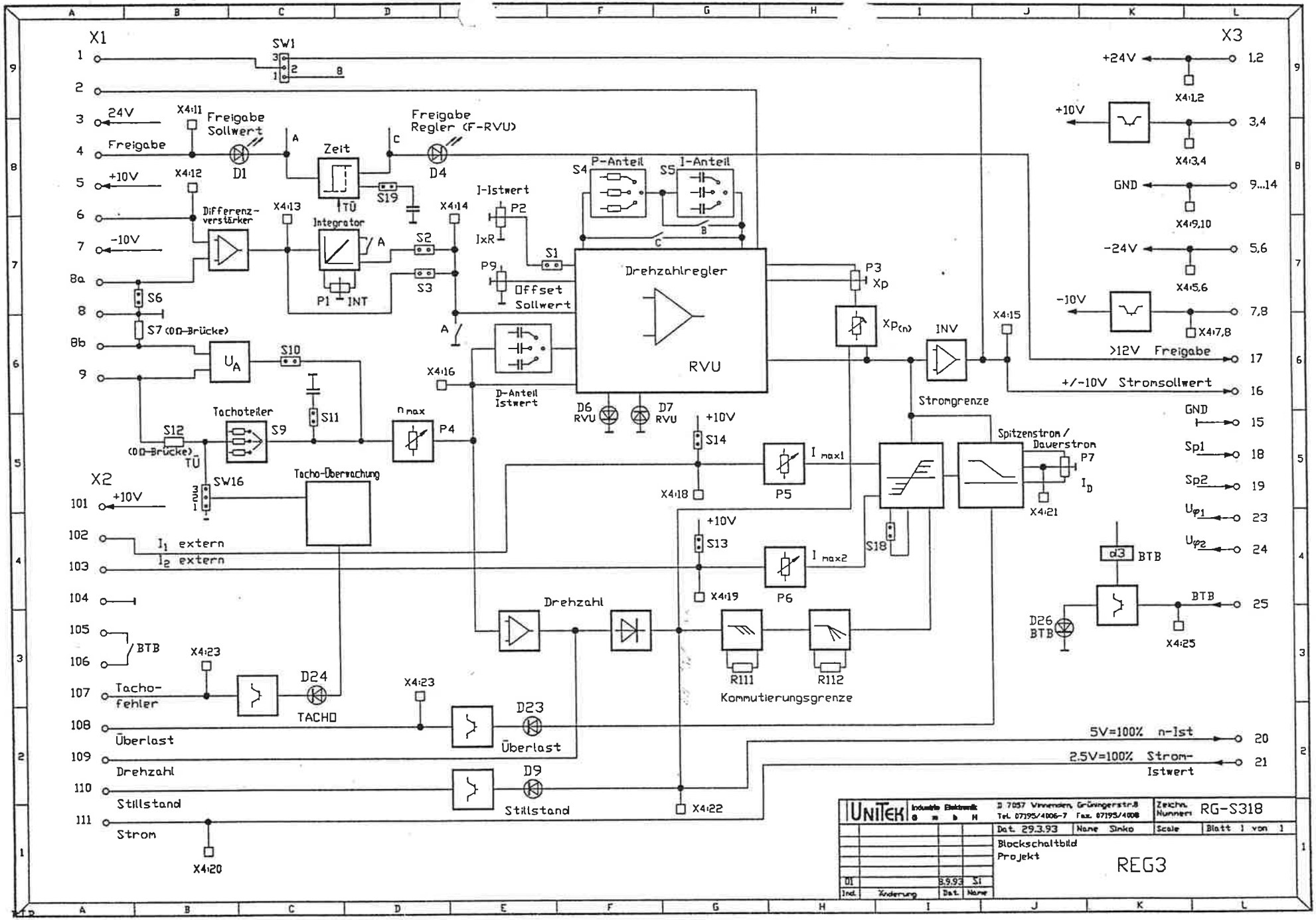
X1
X2
X3
SW1
24V
Freigabe
+10V
-10V
Freigabe Sollwert
Freigabe Regler (F-RVU)
D1
D4
Zeit
TÜ
S19
Differenz-verstärker
Integrator
P1 INT
S2
S3
I-Istwert
P2
IxR
S1
P9
Offset Sollwert
S4 P-Anteil
S5 I-Anteil
Drehzahlregler
RVU
P3 Xp
Xp(n)
INV
Stromgrenze
D-Anteil Istwert
D6 RVU
D7 RVU
S6
S7 (0Ω-Brücke)
UA
S10
S11
S12 (0Ω-Brücke)
Tachoteiler
S9
n max
P4
SW16
Tacho-Überwachung
I1 extern
I2 extern
BTB
Tacho-fehler
D24 TACHO
Überlast
D23 Überlast
Drehzahl
D9 Stillstand
Stillstand
Strom
S14
S13
I max1
I max2
P5
P6
S18
Spitzenstrom / Dauerstrom
P7
ID
Drehzahl
R111
R112
Kommutierungsgrenze
+24V
+10V
GND
-24V
-10V
>12V Freigabe
+/-10V Stromsollwert
Sp1
Sp2
Uφ1
Uφ2
BTB
D26 BTB
5V=100% n-Ist
2.5V=100% Strom-Istwert
UNITEK
D 7057 Winnenden, Grüningerstr.8
Tel. 07195/4006-7 Fax. 07195/4008
Zeichn. Nummer: RG-S318
Dat. 29.3.93
Name Sinko
Scale
Blatt 1 von 1
Blockschaltbild
Projekt
REG3
01
8.9.93
Ind.
Änderung
Dat.
Name

WICHTIGER HINWEIS FÜR DIE BESTELLUNG VON ERSATZTEILEN !

Um evtl. Rücksprachen bei der Bestellung von Ersatzteilen zu vermeiden, sollte Ihr Bestellschein unbedingt folgende Angaben enthalten:

1. Maschinentype
2. Maschinennummer
3. Positions-Nummer der Ersatzteile

Maschinentype und Maschinennummer sind dem Typenschild an der Maschine zu entnehmen.
Die Positionsnummer ist der Ersatzteilliste zu entnehmen, wobei jeweils die ganze Zeile des Textblattes aufgeführt sein sollte.

Zum Beispiel: Type: RAS 68.35
Masch.-Nr.: 109/4
Pos.-Nr.: 104; 1 Stck. Verstellspindel; 004 699; oder
Pos.-Nr.: 108; 2 Stck. Zyl.-Schraube; 005 064; M 8x30 DIN 912

Teile die in der Ersatzteilliste mit strichpunktierter Linie eingerahmt und mit einer Pos.- Nr. versehen sind, können nur komplett, also in zusammengebautem Zustand, nachgeliefert werden.
Bei Motoren bitte wie im unten angeführten Beispiel, Leistung und Daten des Typenschildes vom Motor angeben.

Zum Beispiel: Typ: D 2 A 63/309 K, Motor Nr. 297854
KW 3,0; 220/280 V; 50 Hz; n_1 = 930; n_2 = 39,5; A 9,7/5,6

WICHTIG FÜR AUSLÄNDISCHE BESTELLER

Ausländische Besteller bitten wir, die Zeilen hinter den Pos.-Nr. jeweils, wie in der Ersatzteilliste aufgeführt, in deutscher Sprache anzugeben !

IMPORTANT NOTE FOR ORDERING SPARE PARTS

To eliminate repeated inquiries when ordering spare parts, your order sheet should definitely contain the following data:

1. Machine Type
2. Machine Number
3. Item Number of spare parts

Machine type and machine number are shown on type plate of machine.
The item number is shown in the spare parts list; the complete line of the resp. sheet should be quoted.

For example: Type: RAS 68.35
Machine Nr.: 109/4
Item Nr.: 104; 1 each Verstellspindel; 004 699 or
Item Nr.: 108; 2 each Zyl.-Schraube ; 005 064; M 8x30 DIN 912

Parts which are shown in the spare parts list with a dot-and-dash line and have only one item number can be delivered only complete, that is, in assembled condition.

Motors should be ordered as shown below. State output and data of rating plate of motor.

For example: Type: D 2 A 63/309 K, Motor Nr. 297854
KW 3,0; 220/280 V; 50 c/s; n_1 = 930; n_2 = 39,5; A 9,7/5,6

IMPORTANT FOR CUSTOMERS FROM ABROAD

Customers in foreign countries are requested to be kind enough and write the lines behind the item number in the German language, as printed in the spare parts list.

DIRECTIVES IMPORTANTES POUR LA COMMANDE DE PIECES DE RECHANGE!

Afin d'éviter des échanges de consultation éventuels lors de la commande de pièces de rechange, nous vous saurions gré de bien vouloir mentionner sans faute les indications suivantes sur votre bon de commande:

1. Type de machine
2. N° de la machine
3. N° -répertoire des pièces de rechange

Le type de machine, de meme que le numéro de la machine, peuvent être repris à la plaque fixée sur la machine.

Le numéro-repertoire peut être repris à la liste des pièces de rechange, en vous priant de mentionner la ligne complète du texte.

P. ex.:	Type:	RAS 68.35
	N° de machine:	109/4
	N° - rép.:	104; 1 Stck. Verstellspindel; 004 699; ou
	N° - rép.:	108; 2 Stck. Zyl.-Schraube; 005 064; M 8 x 30 DIN 912

Les pièces qui, dans la liste des pièces de rechange, sont encadrées d'une ligne pointillée et qui possèdent un numéro-répertoire, ne peuvent être fournies ultérieurement qu' à l'état complet, c.à d. assemblées complètement.

En ce qui concerne les moteurs, nous vous prions d'indiquer, tel que montré à l'exemple suivant, la puissance et les données techniques figurant sur la plaque de moteur.

P. ex. : Type: D 2 A 63/309 K, Motor Nr.297854
KW 3,0; 220/380 V; 50 Hz; nI=930; n2=39,5; A 9,7/5,6

IMPORTANT POUR LES CLIENTS A L'ETRANGER

Nous prions les clients étrangers de bien vouloir toujours mentionner le texte derrière les numéros-répertoire en langue allemande, tel qu' indiqué dans la liste des pièces de rechange!

OBSERVACIONES IMPORTANTES PARA EL PEDIDO DE REPUESTOS

A fin de evitar preguntas de vuelta al hacer pedidos de repuestos, dar en la hoja de pedidos los datos siguientes:

1. Tipo de la máquina
2. Número de la máquina
3. Número de posicion del repuesto (en la lista)

El tipo y el número de la máquina pueden ser leidos en la placa del tipo.
El número de posición puede ser tomado de la lista de repuestos, para ésto, escribir la linea completa de la hoja del texto.

Por ejemplo:

Tipo	RAS 68.35
No. de máquina:	109/4
No. de posición:	104; 1 Stck. Verstellspindel; 004 699;
No. de posición:	108; 2 Stck. Zyl.-Schraube; 005 064; M 8 x 30 DIN 912

Las piezas de la lista de repuestos que están rodeadas por una linea de puntos y rayas, y están dadas por un No. de posición, solamente pueden ser suministradas como juego completo, es decir ya montadas.

Al pedir motores dar la potencia y los datos de la placa de tipo, como en el ejemplo de abajo.

Por ejemplo:
Tipo D 2 A 63/309 K, Motor-No. 297854
KW 3,0; 220/280 V; 50 Hz; n_1 = 930 rpm; n_2 = 35,5 rpm;
A 9,7/5,6

IMPORTANTE PARA CLIENTES EXTRANJEROS:

A los clientes extranjeros se les ruega escribir en Alemán la linea después del No. de posición, igual que como está escrito en la lista de repuestos.

REINHARDT
MASCHINENBAU
G M B H

Spare parts list

RAS 74.20-25-30-40

MULTIBEND 2000
MULTIBEND 9000

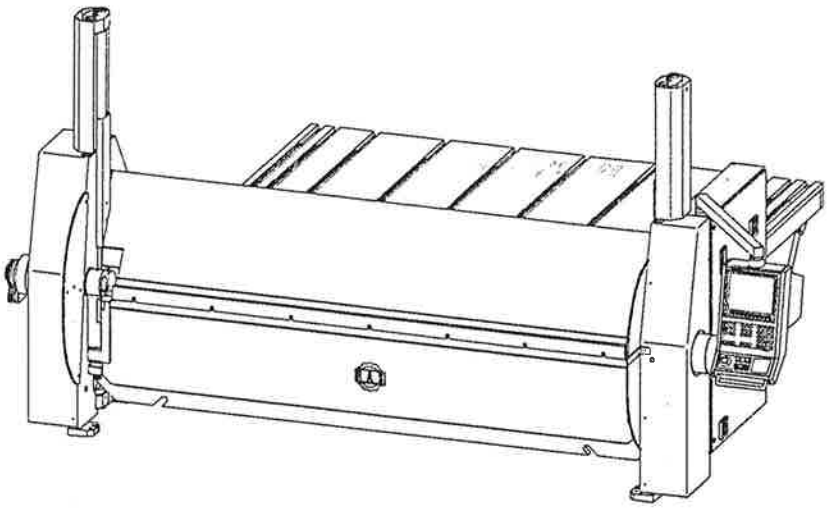

consisting of:

basic machine

picture presentation	page	1 - 12
listing	page	21 - 35

special equipment

picture presentation	page	9 - 20
listing	page	36 - 47

Spare parts lists US - execution 07.07.94 Schmit	Folding machine		
	RAS 74.20-40	GRUNDMASCHINE: Oberwange, Unterwange und Biegewange	page 1 of page 47

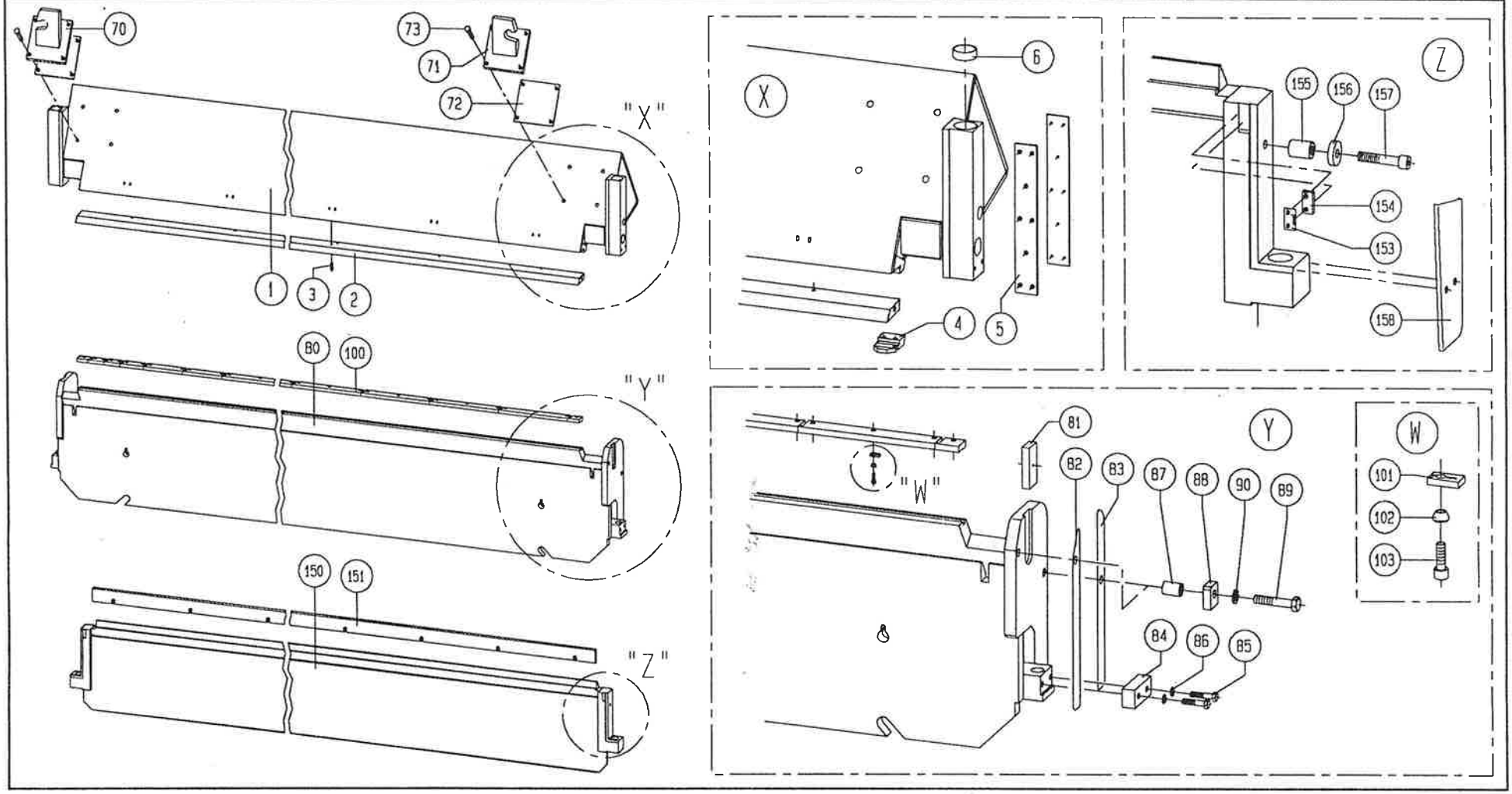

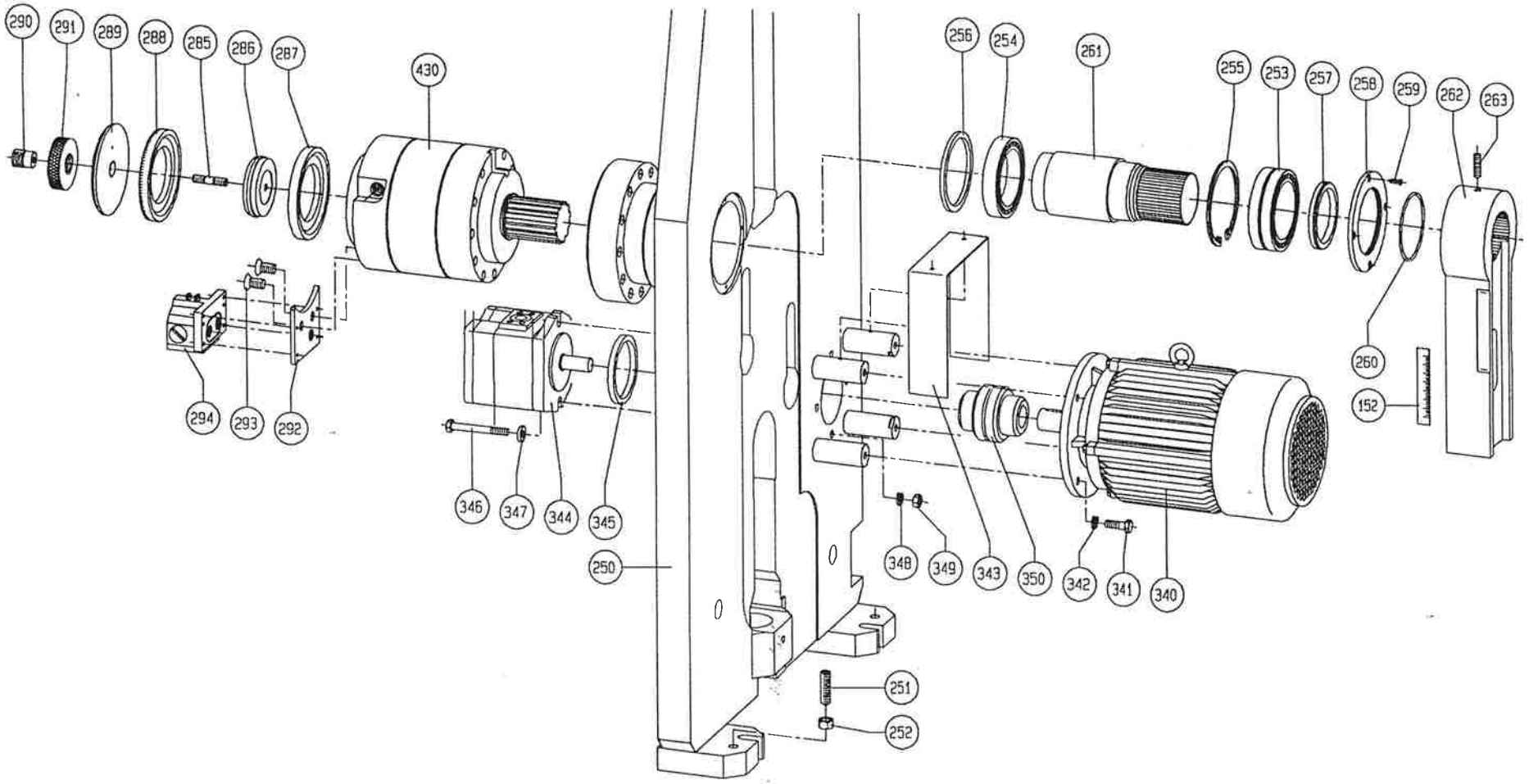
290
291
289
288
285
286
287
430
256
254
261
255
253
257
258
259
262
263
260
152
294
293
292
346
347
344
345
250
348
349
343
350
342
341
340
251
252

Spare parts lists US - execution 07.07.94 Schmit	• Folding machine •		
	RAS 74.20-40	GRUNDMASCHINE: Seitenteil rechts: Messen & Schalten	page 3 of page 47

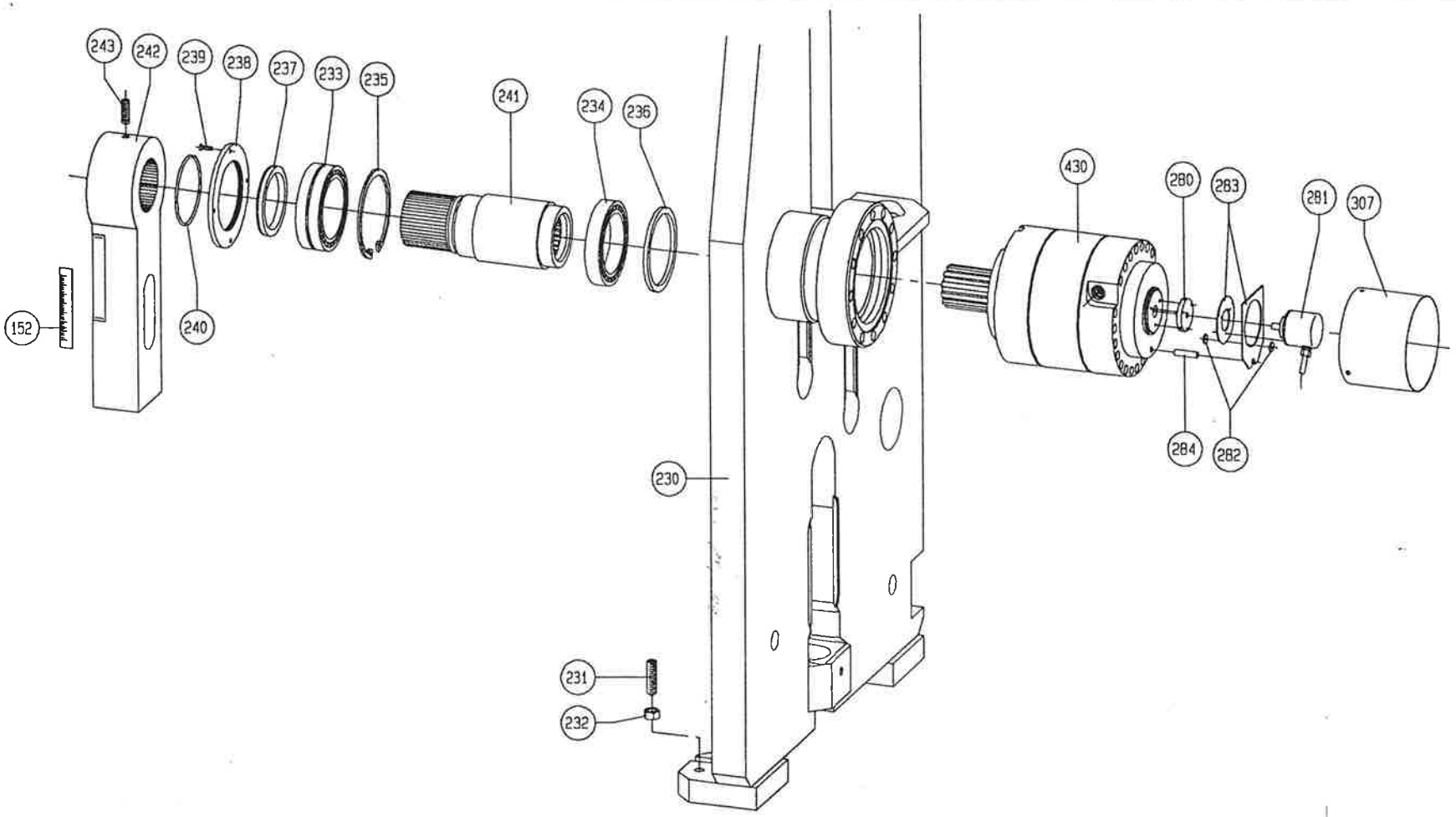

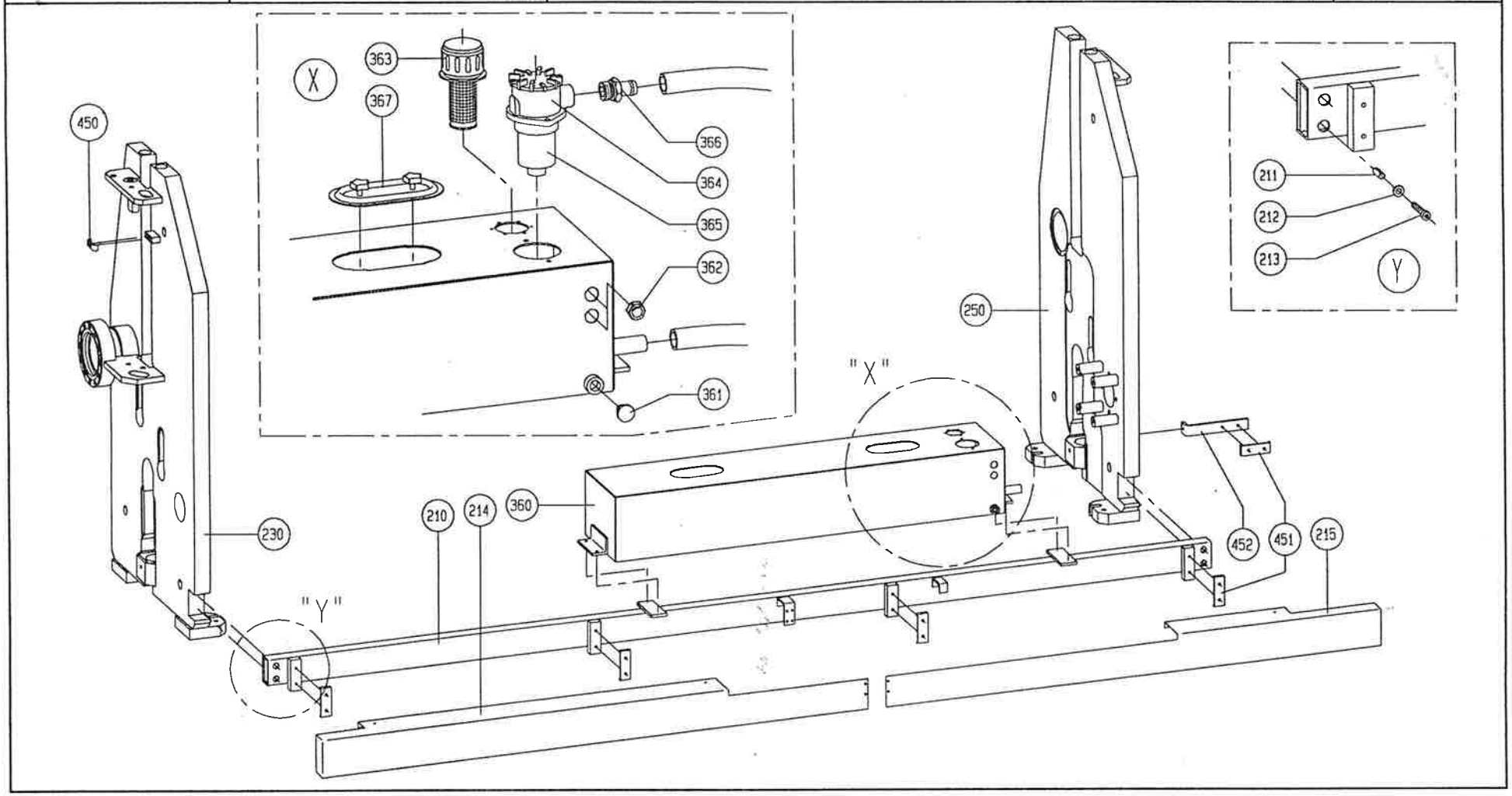
X
363
367
366
364
365
362
361
450
230
210
214
360
"X"
"Y"
250
211
212
213
Y
452
451
215

Spare parts lists US - execution 07.07.94 Schmit	• Folding machine •		
	RAS 74.20-40	GRUNDMASCHINE: Abdeckungen und Seitenteile	page 5 of page 47

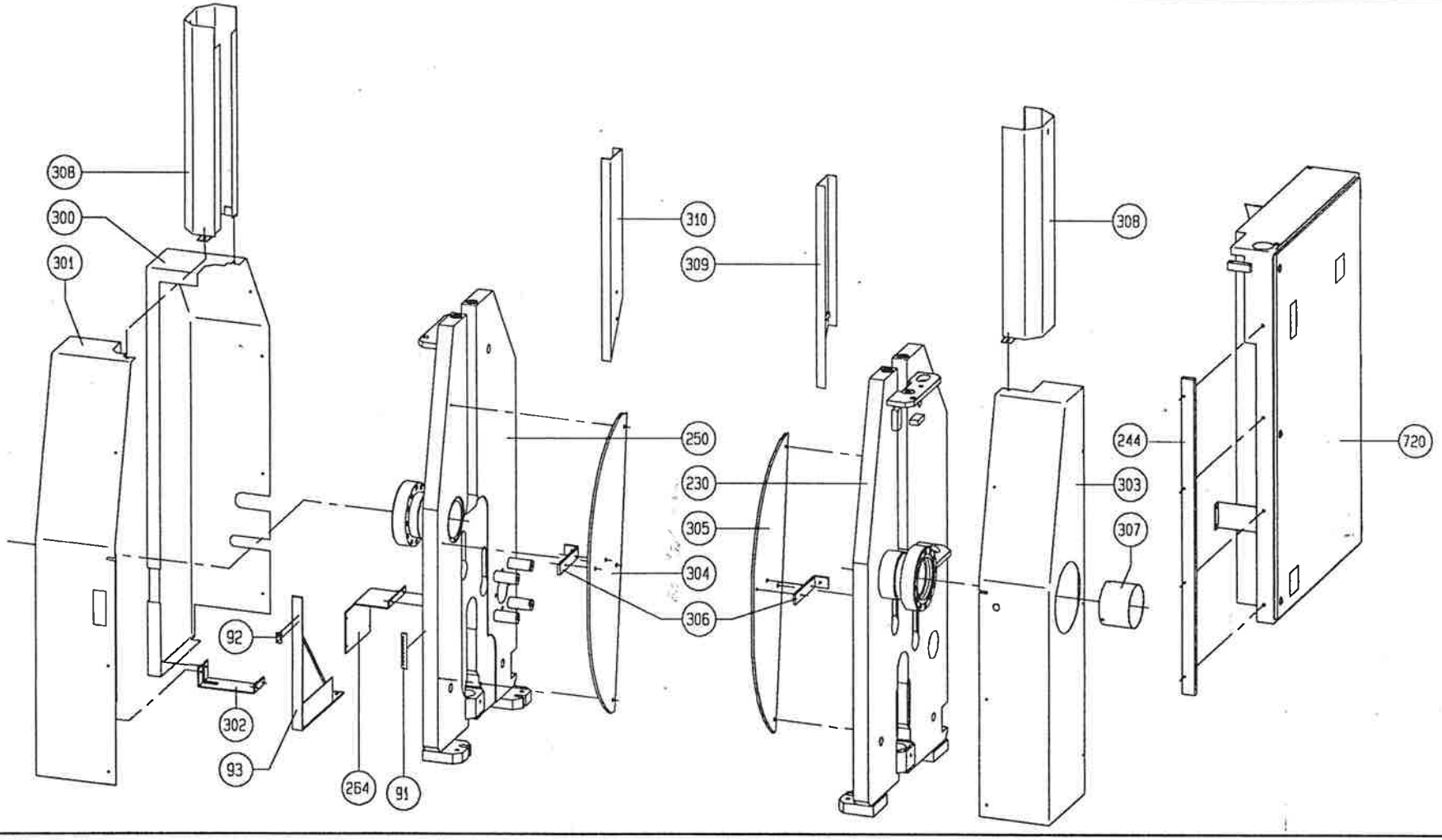

Spare parts lists US - execution 07.07.94 Schmit	• Folding machine •		
	RAS 74.20-40	GRUNDMASCHINE: Unterwange und Unterwangenverstellung kpl.	page 6 of page 47

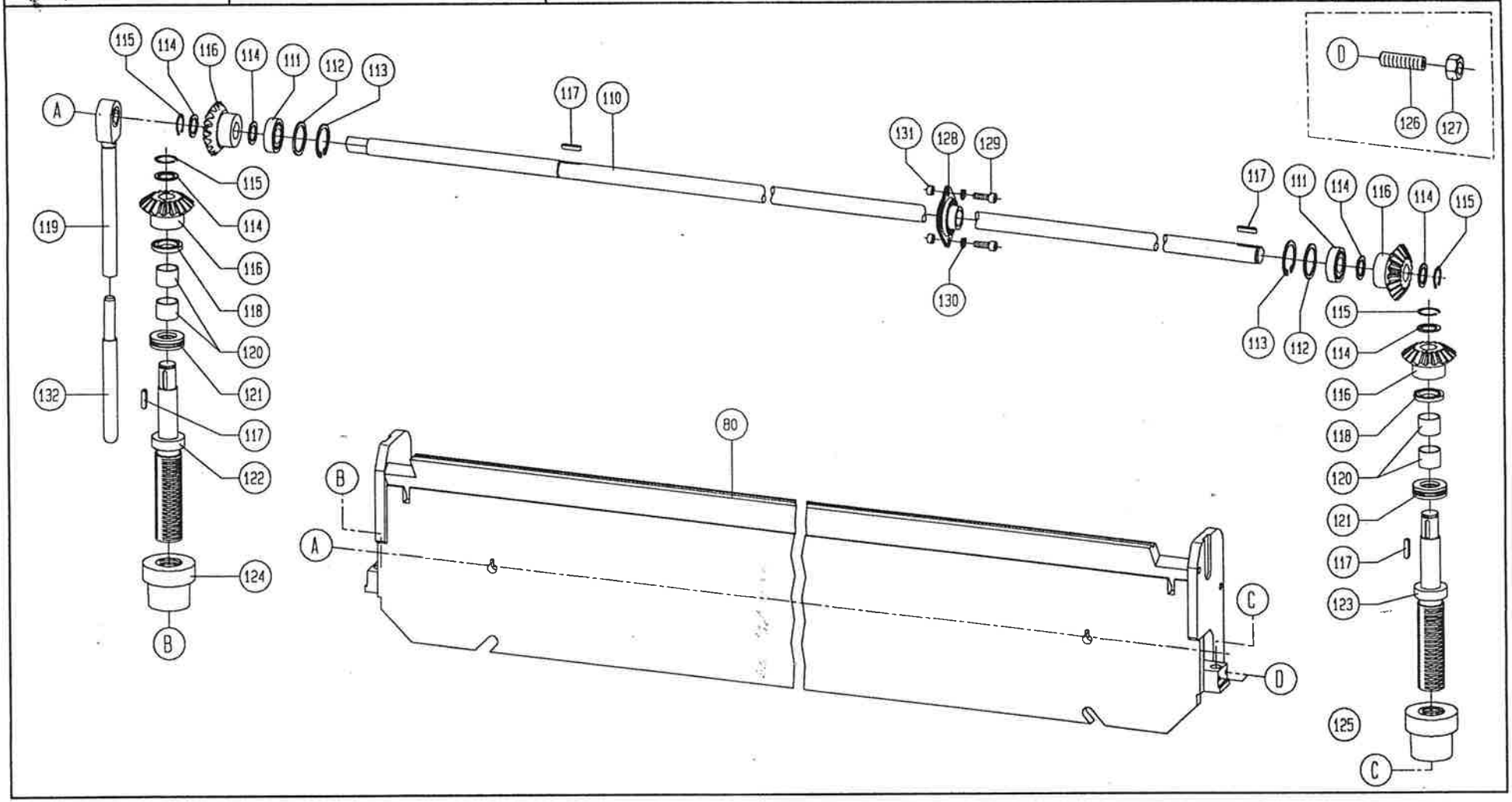

Spare parts lists US - execution 07.07.94 Schmit	• Folding machine •	
RAS 74.20-40	GRUNDMASCHINE: Oberwange: Torsionstrieb, Seitenfuehrung und Hydraulikzylinder	page 7 of page 47

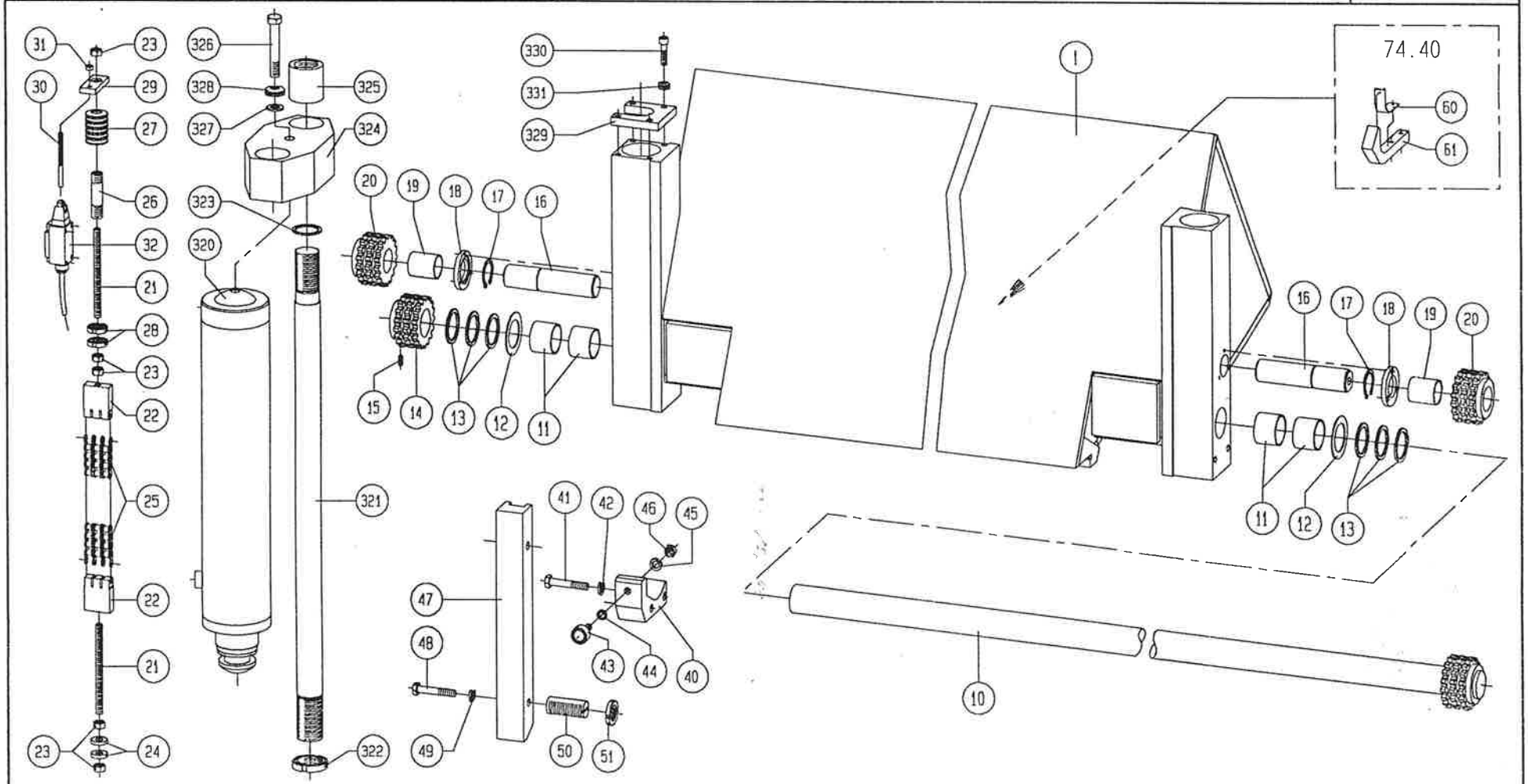

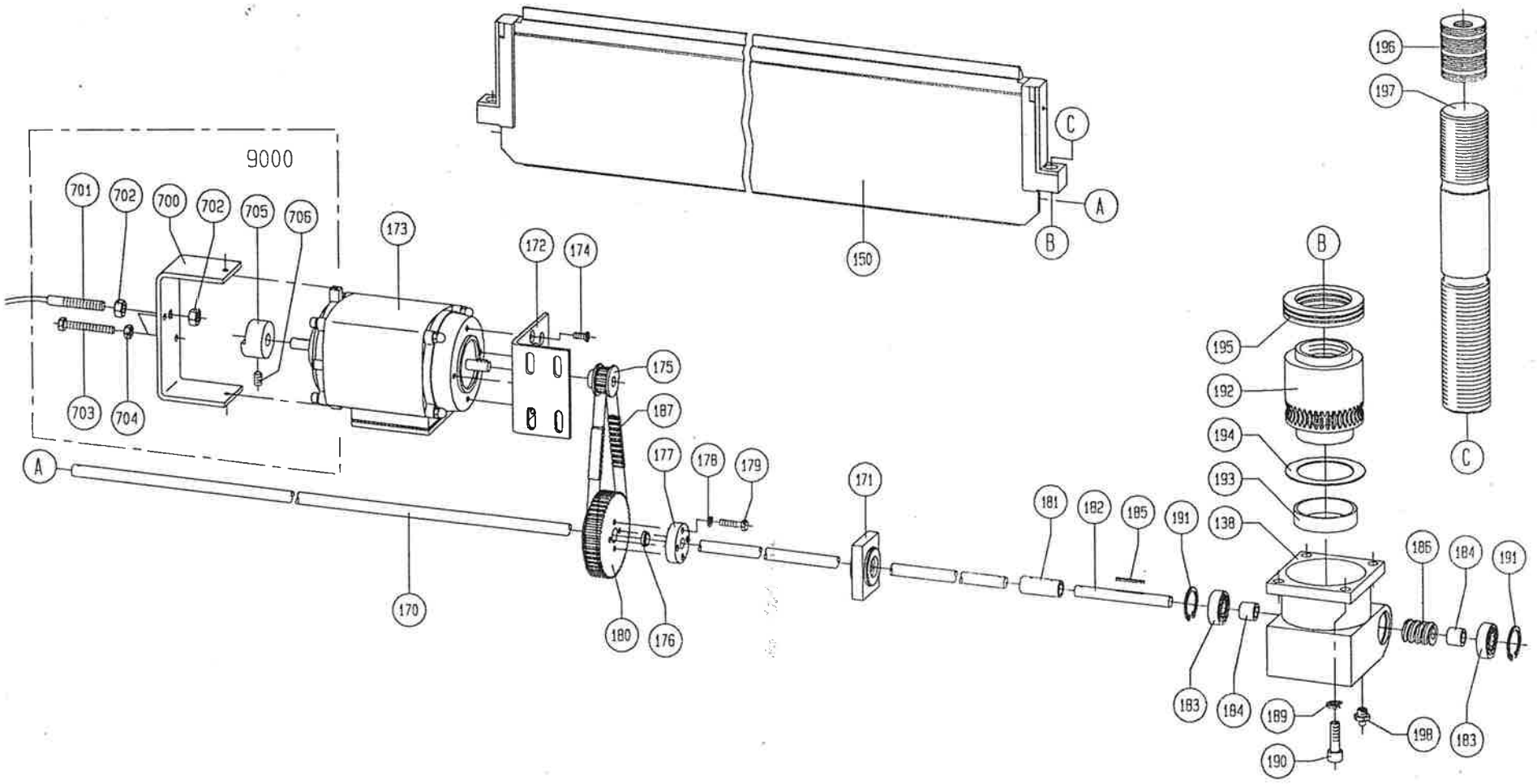
9000
701
702
700
702
705
706
703
704
173
172
174
175
187
177
178
179
170
180
176
171
150
A
B
C
181
182
185
191
138
195
192
194
193
196
197
186
184
191
183
184
189
190
198
183

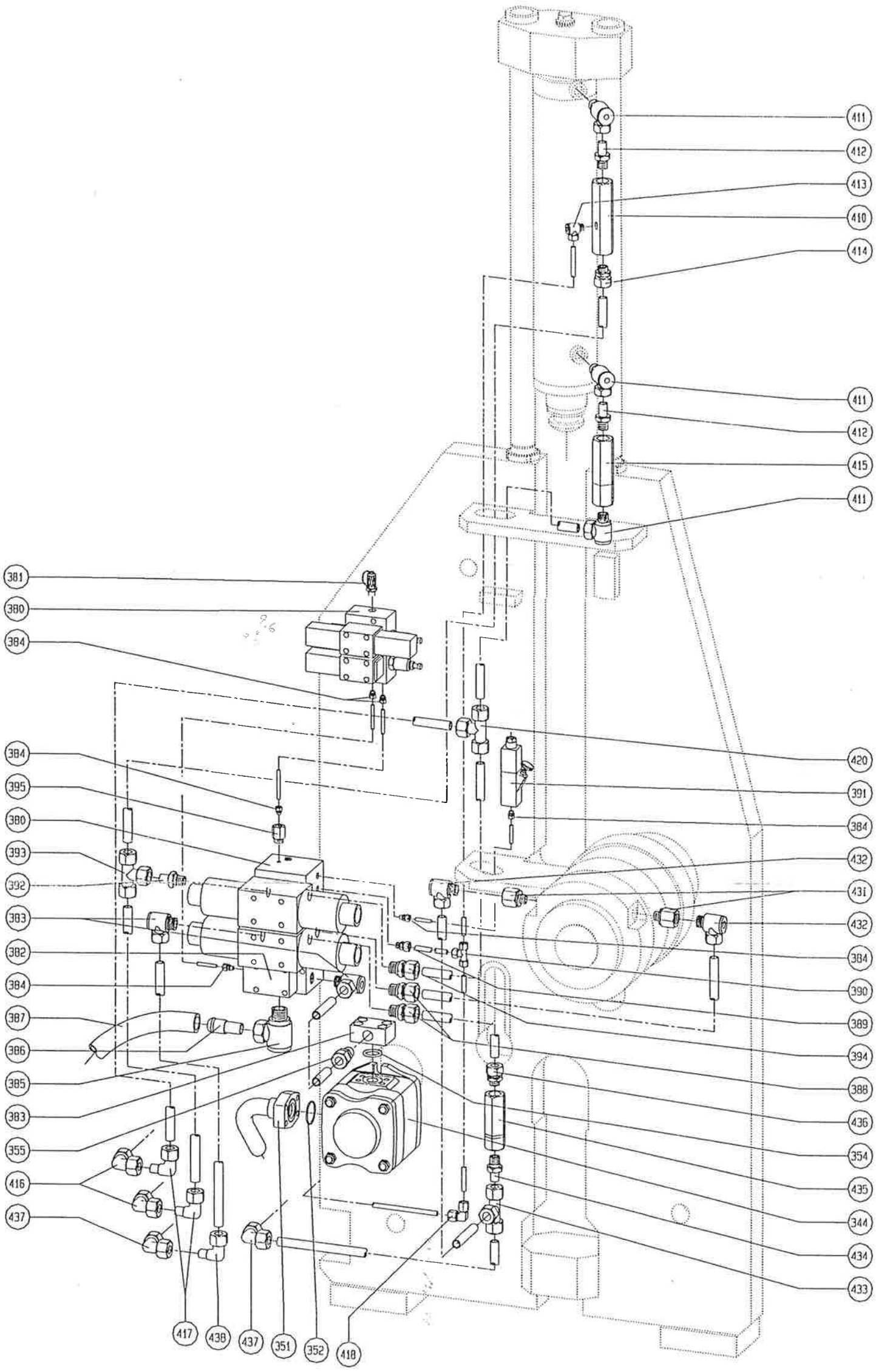
411
412
413
410
414
411
412
415
411
381
380
384
384
420
395
391
380
384
393
432
392
431
383
432
382
384
384
390
387
389
386
394
385
388
383
436
355
354
416
435
437
344
434
433
417
438
437
351
352
418

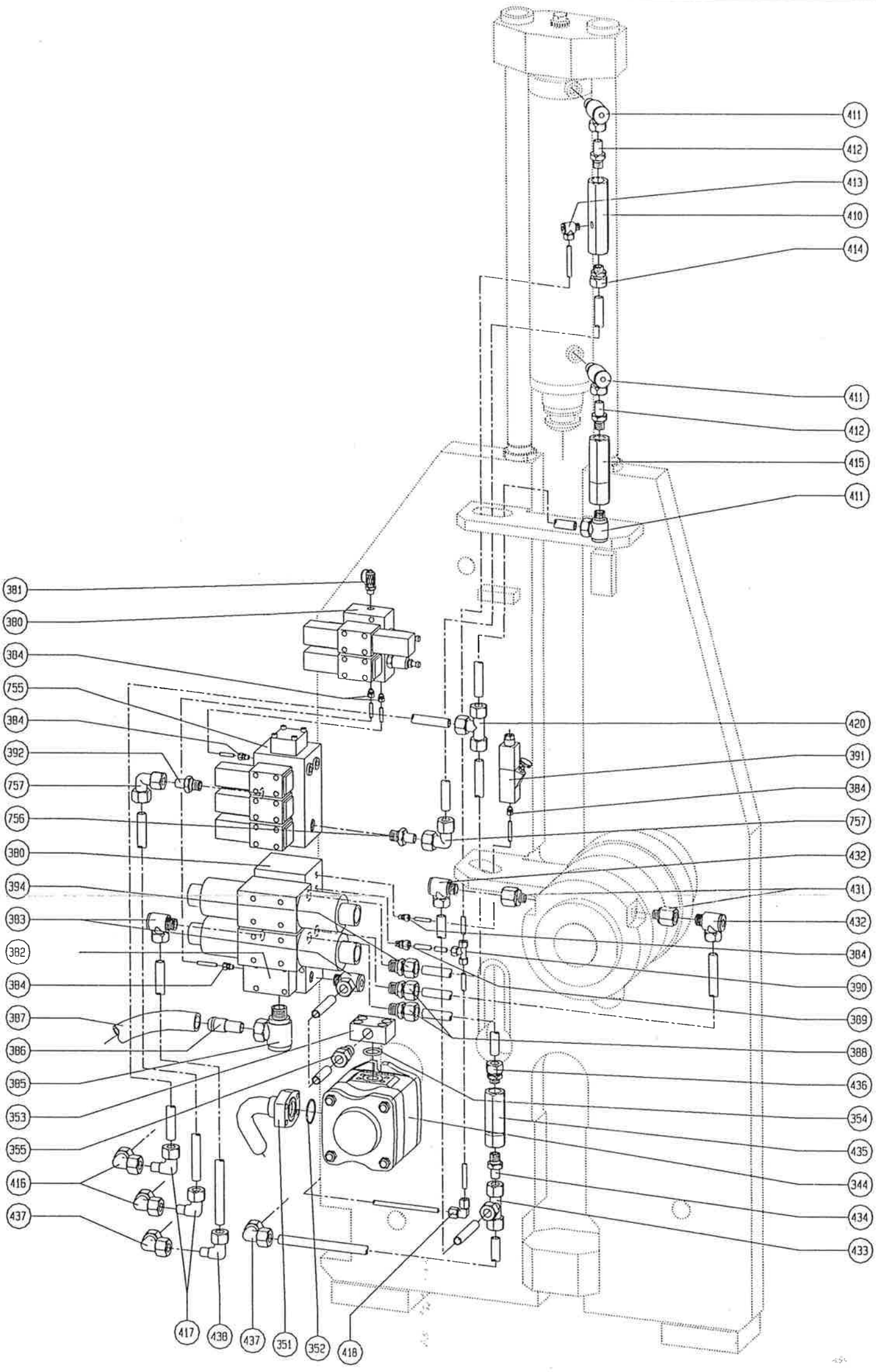
411
412
413
410
414
411
412
415
411
381
380
384
755
384
392
757
756
380
394
383
382
384
387
386
385
353
355
416
437
420
391
384
757
432
431
432
384
390
389
388
436
354
435
344
434
433
417
438
437
351
352
418

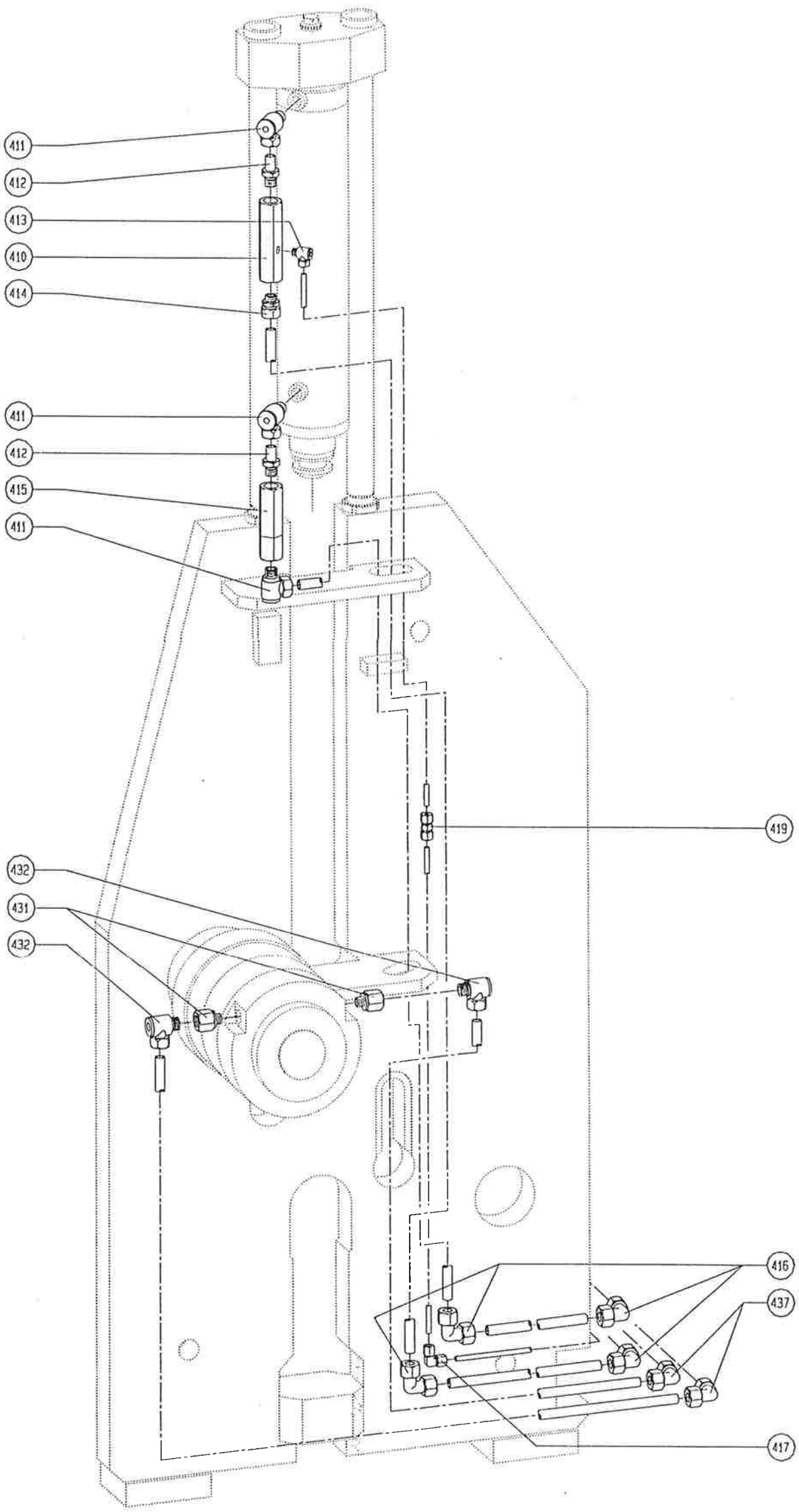
411
412
413
410
414
411
412
415
411
419
432
431
432
416
437
417

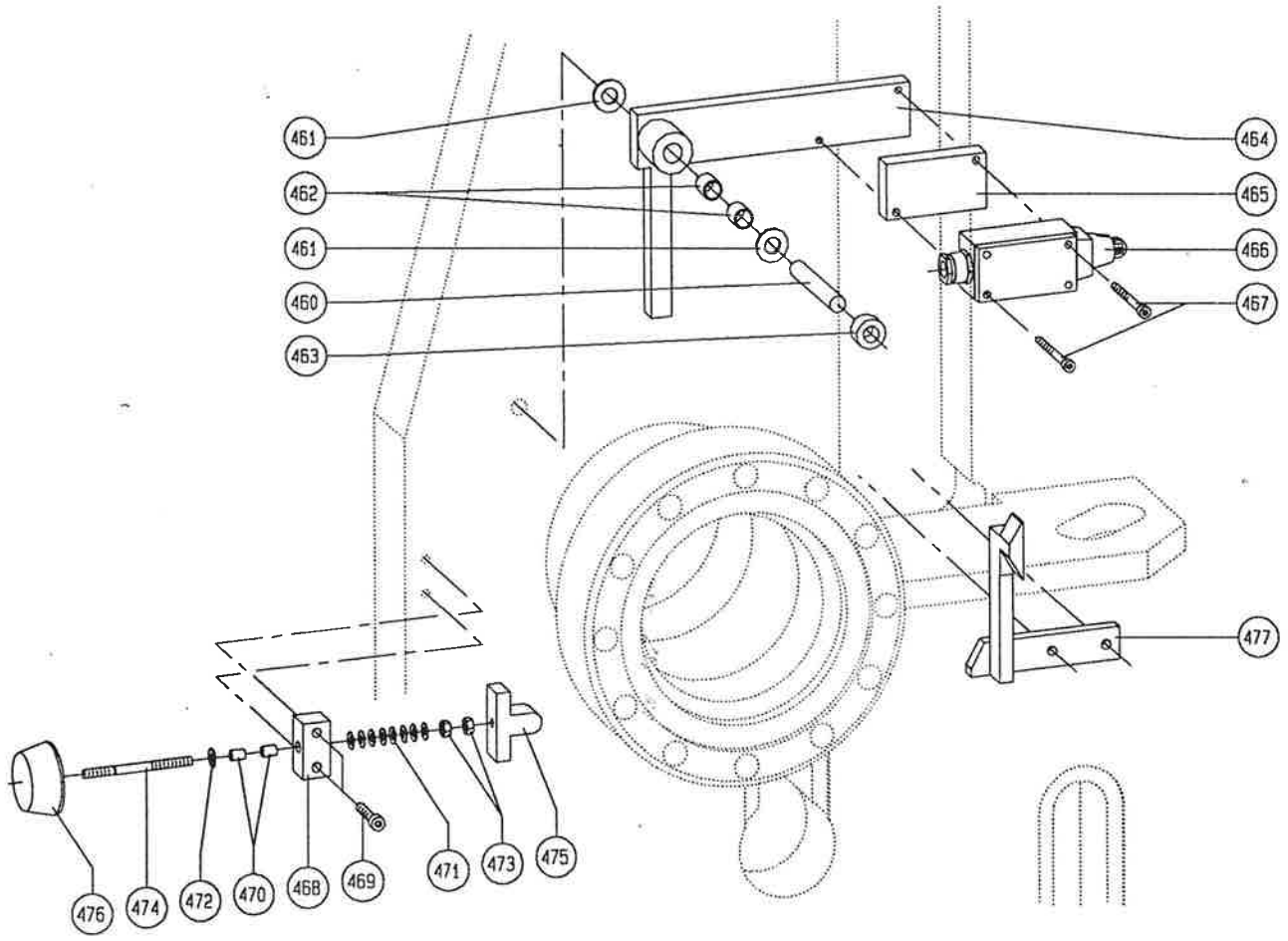
461
462
461
460
463
464
465
466
467
477
476
474
472
470
468
469
471
473
475

ZUSATZEINRICHTUNG: MULTIBEND 2000 / 9000:
Bedienkasten mit Galgen und Fuss-Schalter

2000

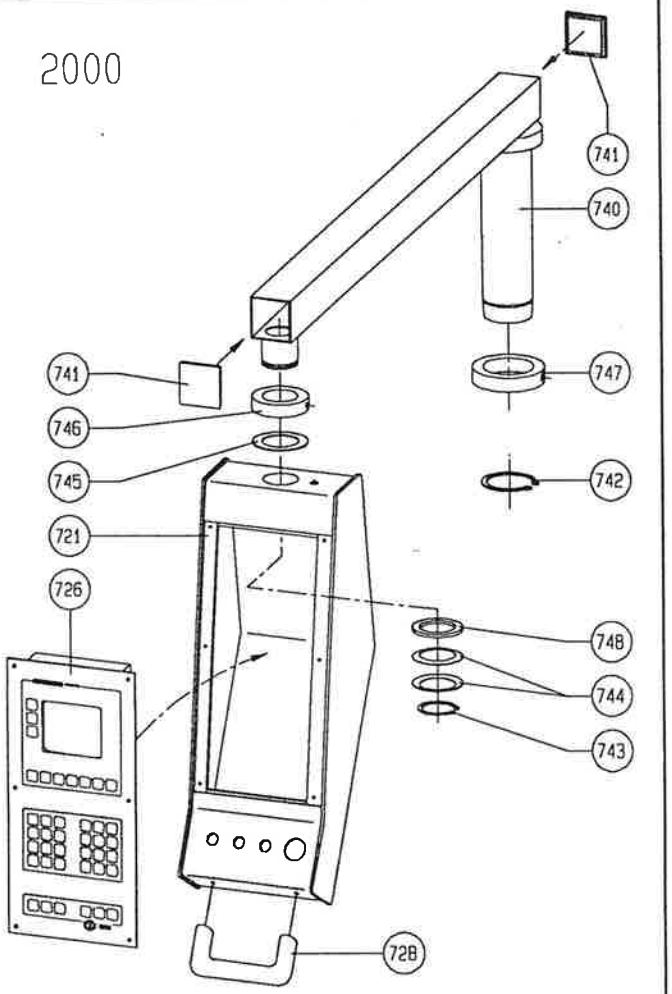

9000

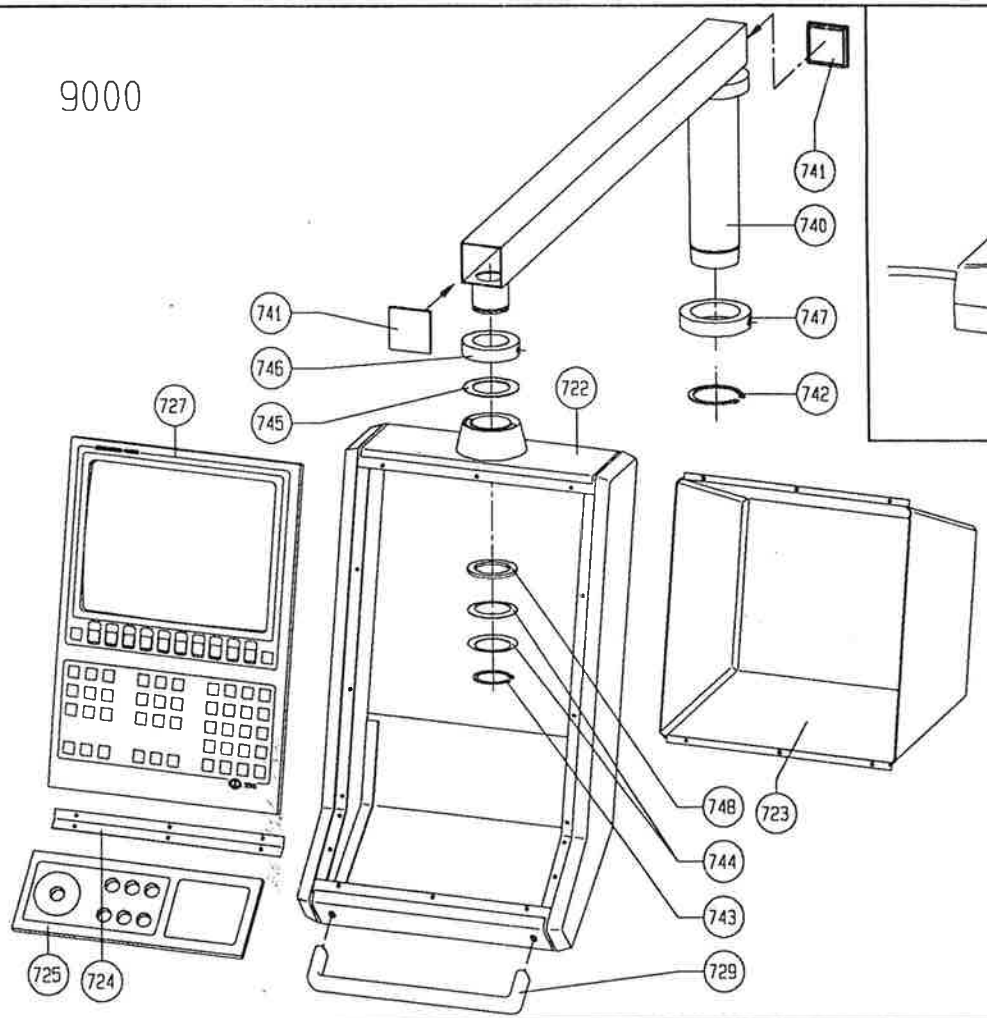

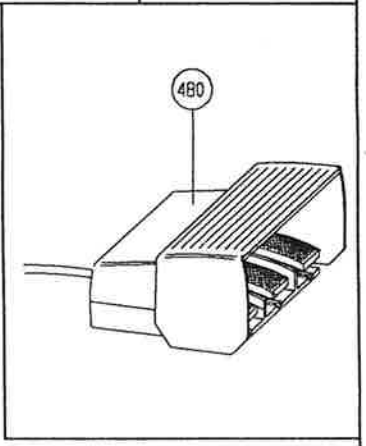

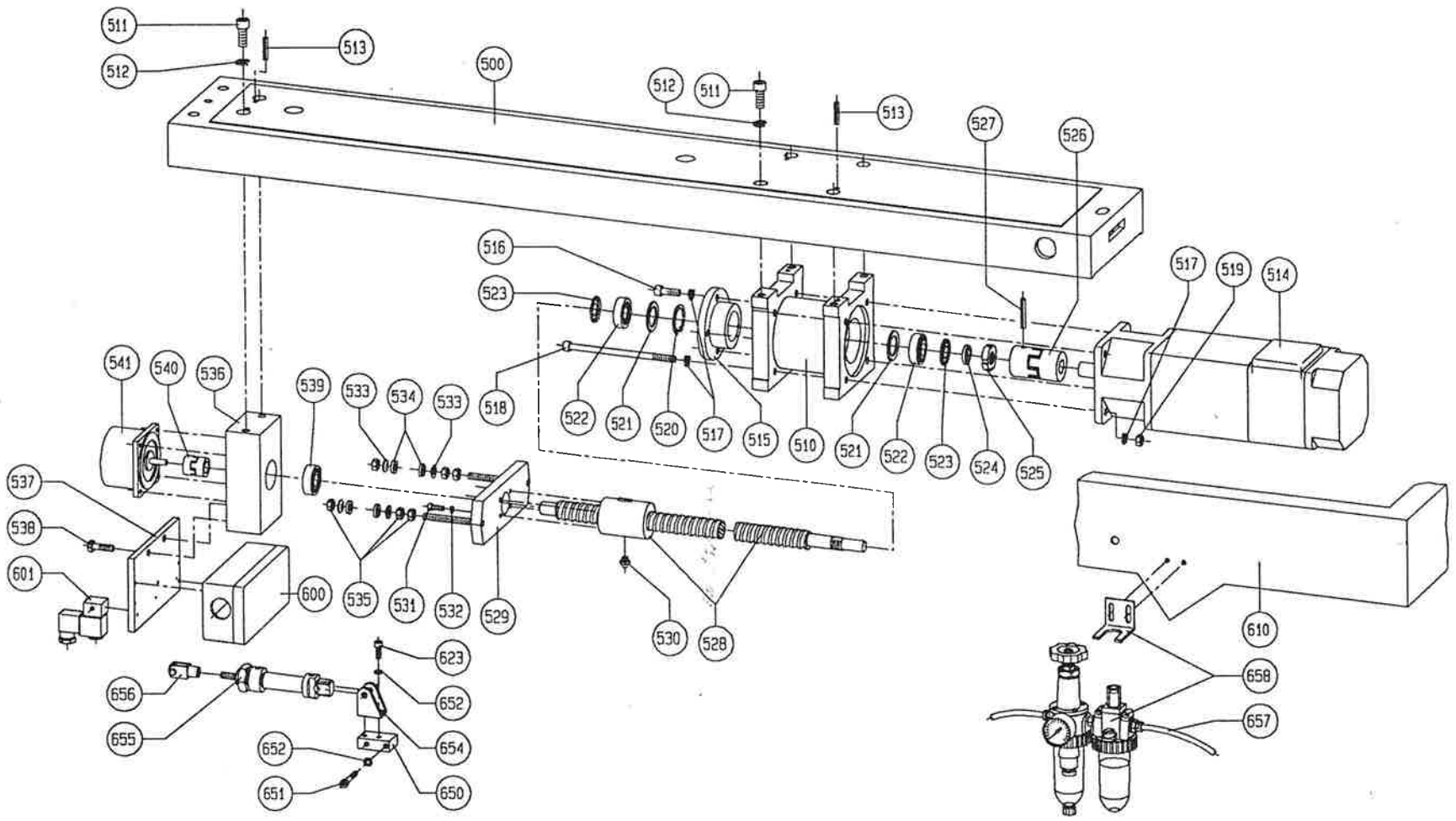
511
512
513
500
512
511
513
527
526
516
523
517
519
514
541
540
536
539
533
534
533
518
522
521
520
517
515
510
521
522
523
524
525
537
538
601
600
535
531
532
529
530
528
610
658
657
623
652
654
650
656
655
652
651

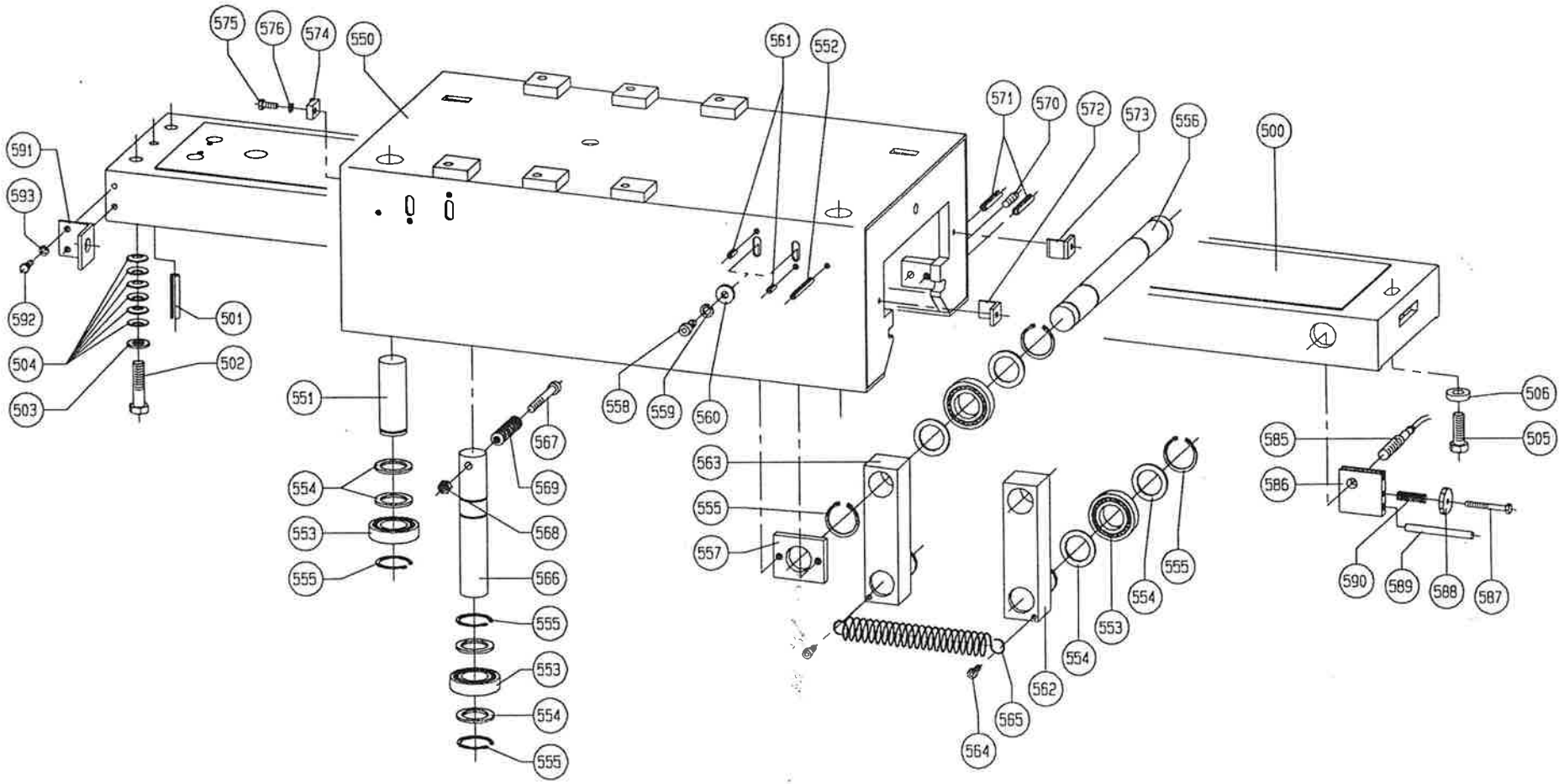
575
576
574
550
561
552
571
570
572
573
556
500
591
593
592
501
504
502
503
551
554
553
555
567
569
568
566
555
553
554
555
558
559
560
563
555
557
562
554
553
554
555
564
565
506
505
585
586
590
589
588
587

Folding machine

RAS 74.20-40

ZUSATZEINRICHTUNG: MULTIBEND 2000 / B001:
Rahmen kpl., Abstuetzung kpl. und Anschlagtraeger kpl.

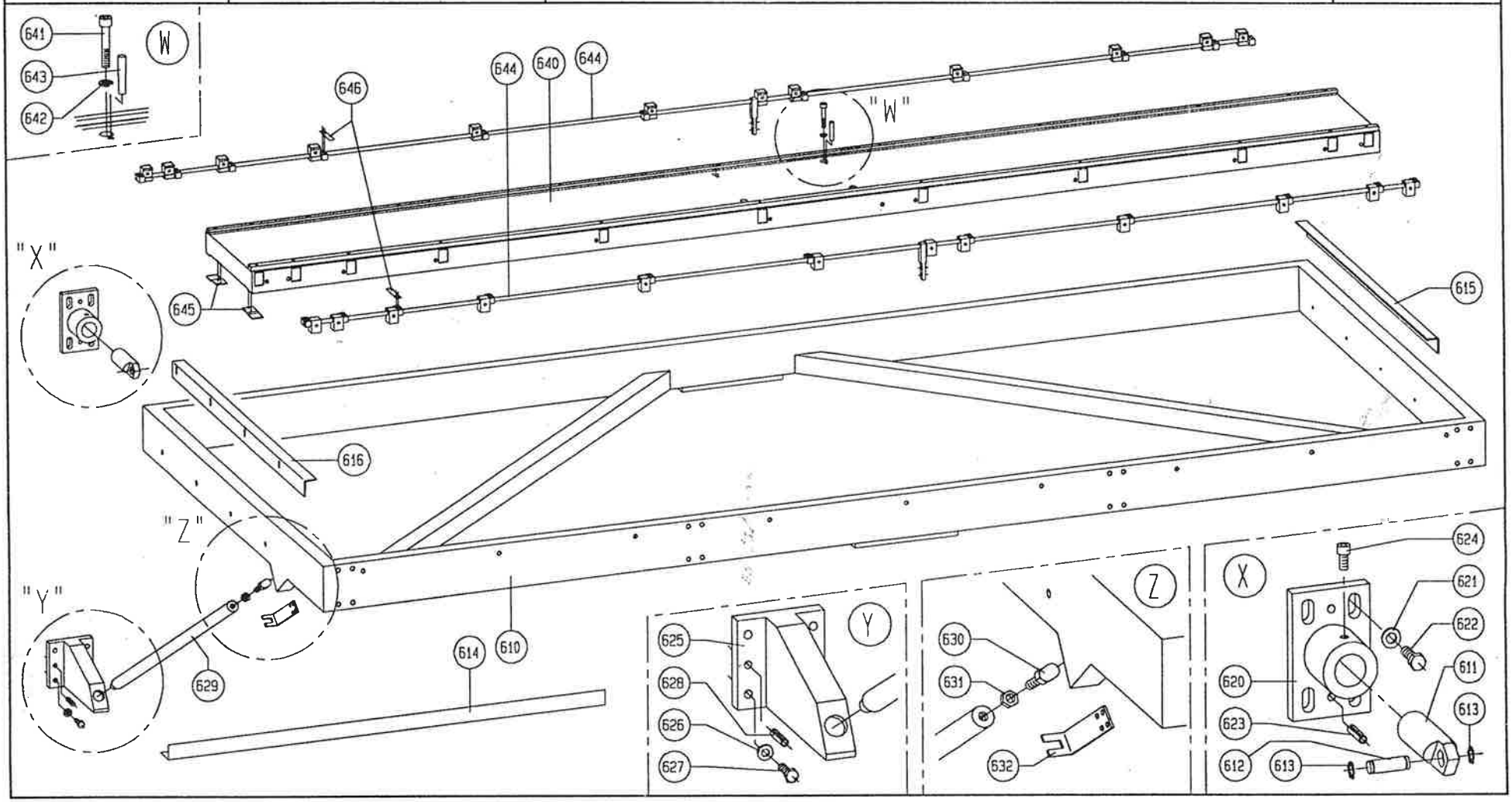

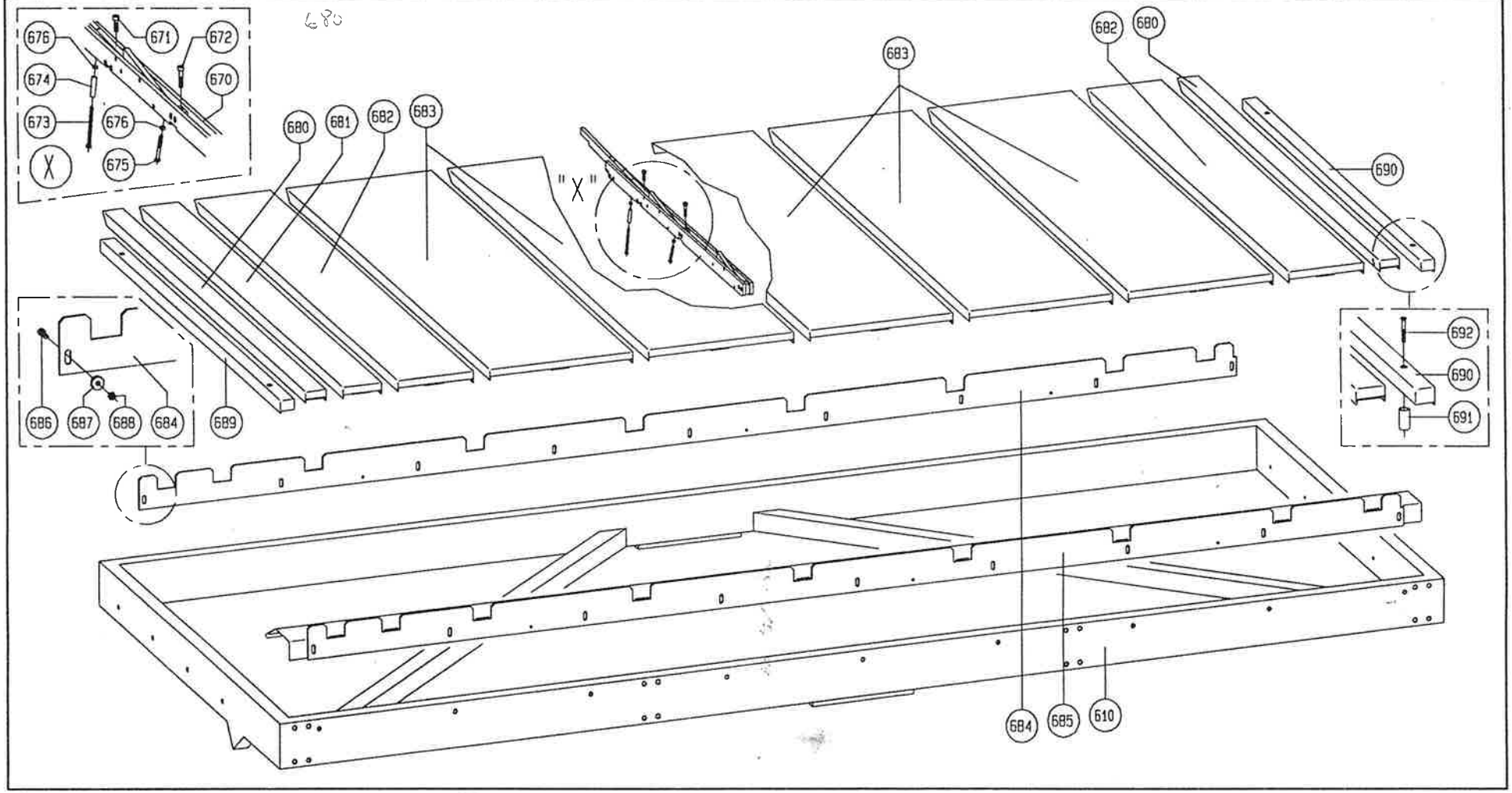
676
671
672
674
670
673
676
675
X
680
681
682
683
"X"
682
680
683
690
692
690
691
686
687
688
684
689
684
685
610

9000

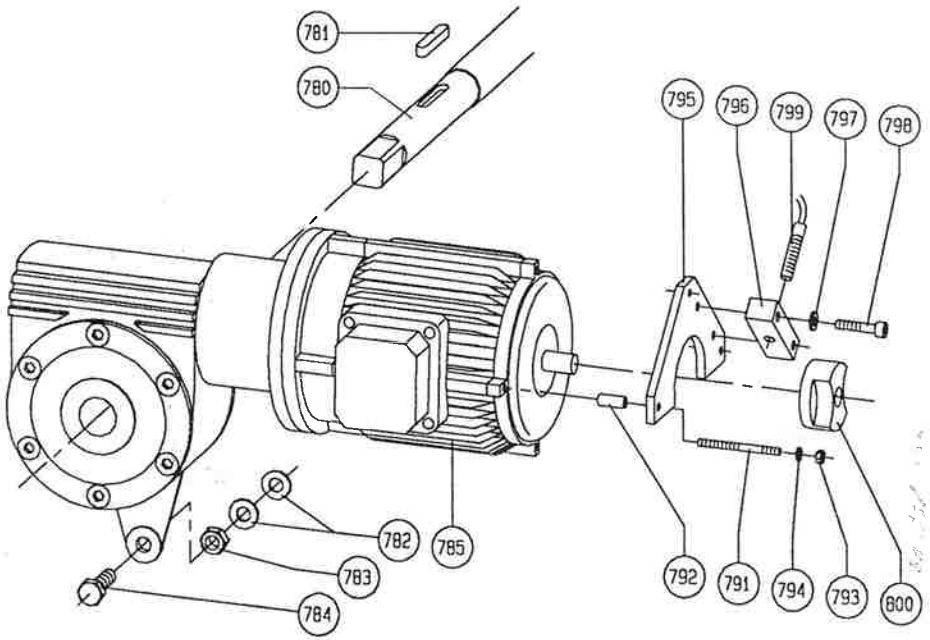
781
780
795
796
799
797
798
782
785
783
784
792
791
794
793
800

2000

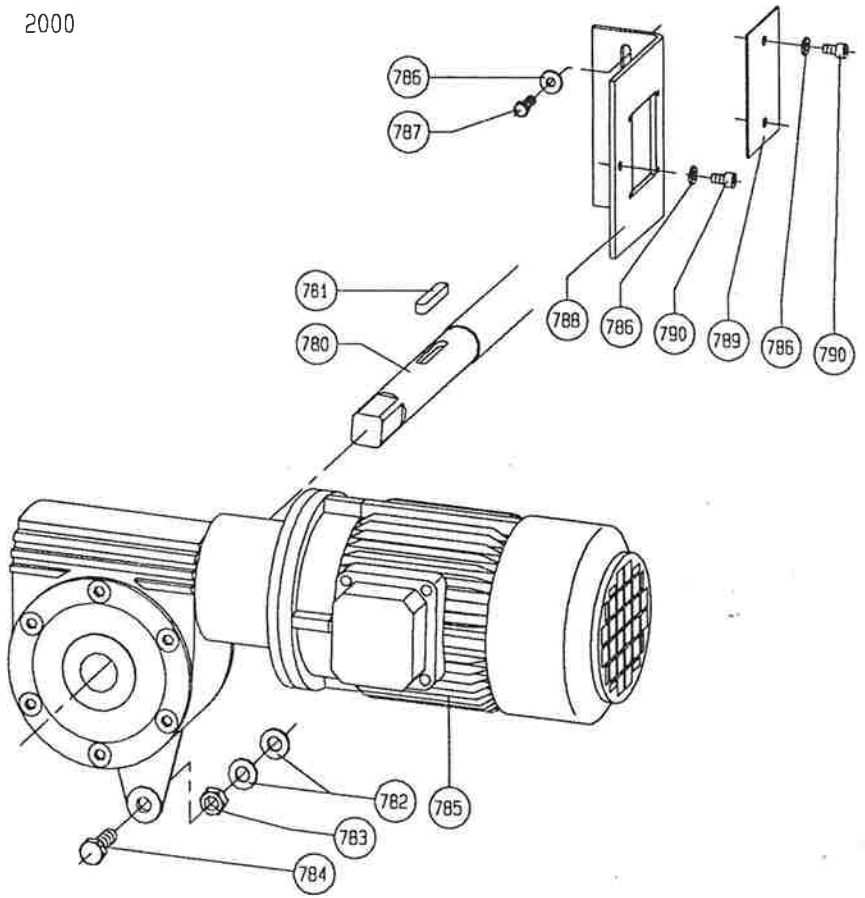
786
787
781
780
788
786
790
789
786
790
782
785
783
784

MULTIBEND 2000

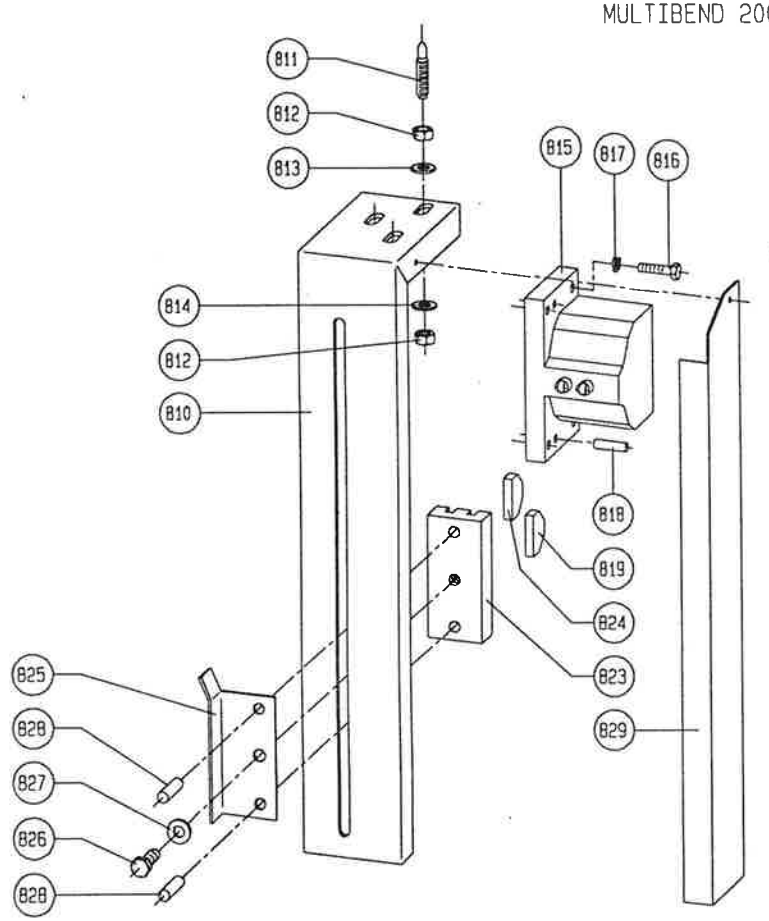

MULTIBEND 9000

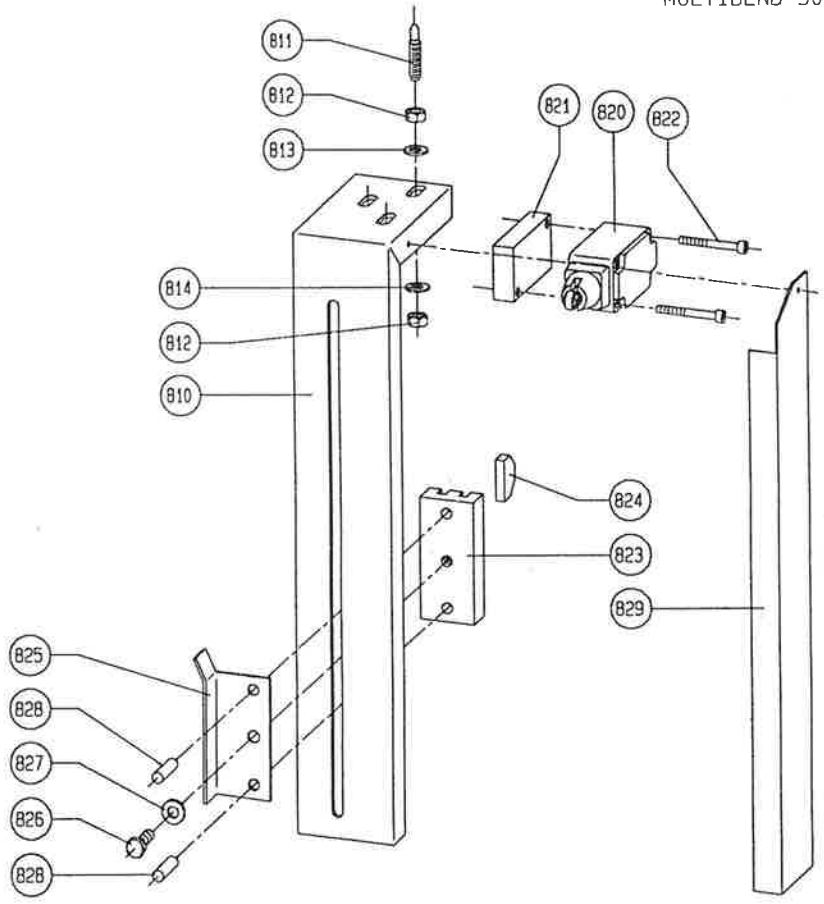

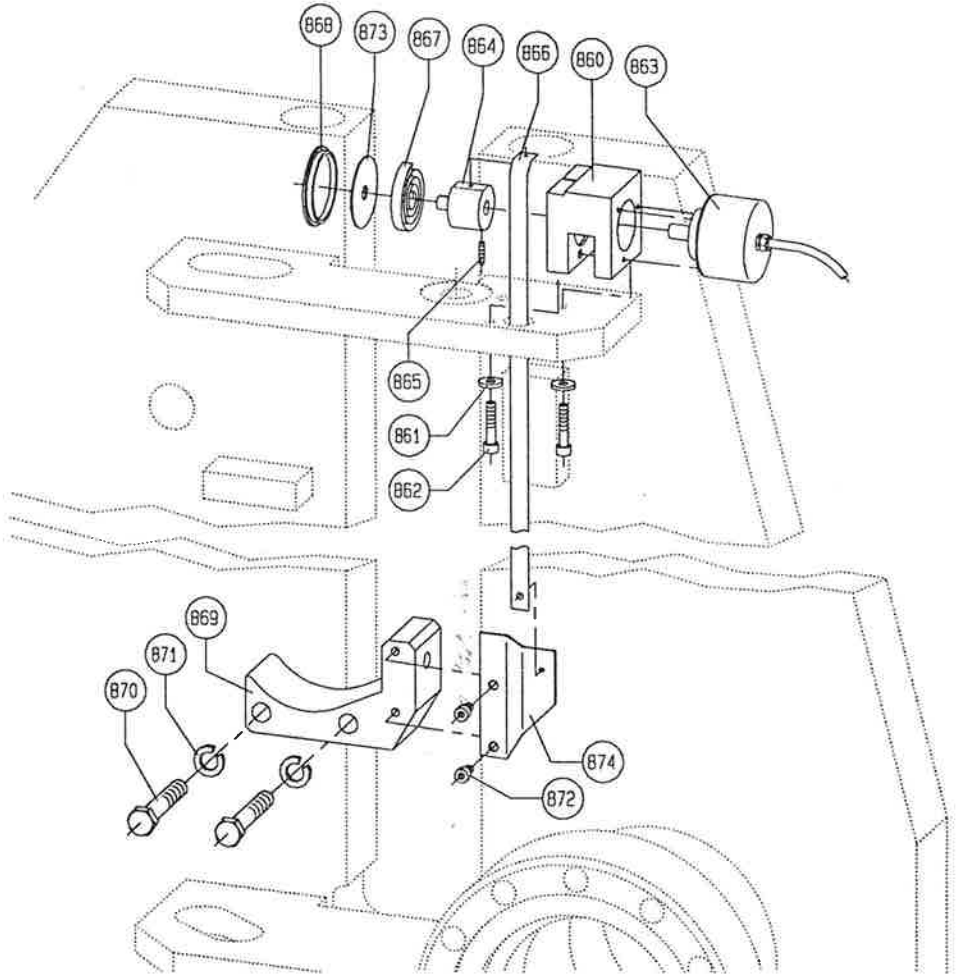
868
873
867
864
866
860
863
865
861
862
869
871
870
874
872

Spare parts lists US - execution	Folding machine	
07.07.94 Schmit	RAS 74.20-40	GRUNDMASCHINE: Oberwange kpl. und Torsionstrieb

Pos.	denomination	page	part`s number / number of pieces				
			74.20-40	74.20	74.25	74.30	74.40
	OBERWANGE KPL.						
1	Oberwange 60°	1		133 144 / 1	133 867 / 1	131 289 / 1	133 506 / 1
	(Oberwange 45°)			134 000 / 1	134 014 / 1	132 861 / 1	134 007 / 1
2	Scharfschiene 45 °	1		007 269 / 1	007 554 / 1	131 390 / 1	083 761 / 1
3	Zyl.Schraube M10x30 DIN 912	1	001 104 / 1				
4	Halteplatte	1		131 183 / 3	131 183 / 4	131 183 / 5	131 183 / 5
	Zyl.Schraube M12x35 DIN 912			000 531 / 6	000 531 / 8	000 531 / 10	000 531 / 10
5	Gleitplatte	1	131 147 / 4				
	Senkschraube M6x16 DIN 7991		001 090 / 32				
6	Lagerpfanne	1	131 138 / 2				
	TORSIONSTRIEB						
10	Torsionswelle	7		133 146 / 1	134 289 / 1	131 266 / 1	133 507 / 1
11	DU-Buchse MB5040	7	051 240 / 4				
12	Anlagescheibe 50x78	7	079 866 / 2				
13	Stuetzscheibe 50x3x62	7	102 022 / 6				
14	Kettenrad	7	131 267 / 1				
15	Gewindestift AM8x16 DIN 914	7	002 531 / 1				
	Kegelstift 10x50 DIN 7978		004 687 / 2				
16	Bolzen	7	131 118 / 2				
	(Bolzen OW 45°)		132 862 / 2				
17	Sicherungsring 40x1,75 DIN 471	7	001 219 / 2				
18	Scheibe	7	131 119 / 2				
	Senkschraube M5x16 DIN 7991		134 843 / 6				
19	DU-Buchse MB4050	7	054 964 / 2				
20	Kettenrad 5/8"	7	131 133 / 2				
21	Zugstange	7	131 124 / 4				
22	Kettenspanner	7	131 122 / 4				
23	Skt.Mutter M12 DIN 934	7	000 247 / 12				
24	Scheibe 13 DIN 7349	7	086 779 / 4				
25	R-Kette 5/8" 3-fach	7	062 844 / 2				

Spare parts lists US - execution	• Folding machine •	page 22
07.07.94 Schmit	RAS 74.20-40	of page 47
	GRUNDMASCHINE: Torsionstrieb, Seitenfuehrung und Unterstuetzung Torsionswelle	

Pos.	denomination	page	part's number / number of pieces					
			74.20-40	74.20	74.25	74.30	74.40	
	Steckglied fuer A-Kette 5/8" 3-fach		062 845 / 4					
26	Stellhuelse	7	131 123 / 2					
27	Tellerfeder 40x20,4x2,5	7	061 861 / 22					
28	Nutmutter M20x1,5 DIN 1804	7	000 891 / 4					
29	Schaltplatte	7	131 125 / 2					
30	Schaltstift	7	131 121 / 2					
31	Skt.Mutter M8 DIN 934	7	000 031 / 2					
32	Endtaster 3SE3 120-0D	7	109 709 / 2					
	Zyl.Schraube M5x40 DIN 912		088 811 / 4					
	SEITENFUEHRUNG		131 479 / 1					
40	Halter	7	131 120 / 1					
41	Skt.Schraube M12x70 DIN 931	7	002 698 / 2					
42	Federring A12 DIN 127	7	001 113 / 2					
43	Kurvenrolle 12x30	7	043 284 / 1					
44	Stuetzscheibe 12x18x1,2	7	049 147 / 1					
45	Federring A12 DIN 127	7	001 113 / 1					
46	Skt.Mutter M12x1,5 DIN 934	7	040 483 / 1					
47	Fuehrungsleiste	7	131 117 / 1					
48	Skt.Schraube M12x70 DIN 931	7	002 698 / 2					
49	Federring A12 DIN 127	7	001 113 / 2					
50	Gewindebolzen	7	131 268 / 2					
51	Nutmutter M30x1,5 DIN 1804	7	005 760 / 2					
	UNTERSTUETZUNG TORSIONSWELLE							
60	Wellenstuetze	7					133 913 / 1	
	(Wellenstuetze OW 45°)						133 937 / 1	
61	Gleitstreifen	7					133 914 / 1	
	(Gleitstreifen OW 45°)						133 936 / 1	
	Pop-Blindniet 3,2						061 645 / 2	
	Senkschraube M8x30 DIN 7991						000 488 / 2	
	Scheibe						133 912 / 2	

Spare parts lists
US - execution

07.07.94 Schmit

Folding machine

RAS 74.20-40

GRUNDMASCHINE:
Kranaufhaengung und Unterwange Anbau

Pos.	denomination	page	part's number / number of pieces					
			74.20-40	74.20	74.25	74.30	74.40	
	KRANAUFHAENGUNG							
70	Kranhaken kpl. links	1	152 311 / 1					
	(Kranhaken kpl. links OW 45°)		152 469 / 1					
71	Kranhaken kpl. rechts	1	152 312 / 1					
	(Kranhaken kpl. rechts OW 45°)		152 468 / 1					
72	Zwischenlage	1	155 021 / 2					
73	Skt.Schraube M20x50 DIN 933	1	157 777 / 8					
	Verschluss-Stopfen		152 786 / 8					
	UNTERWANGE ANBAU							
80	Unterwange	1		133 149 / 1	133 585 / 1	131 306 / 1	133 510 / 1	
81	Feuhrungsfeder	1	131 283 / 2					
	Spannhuelse 8x50 DIN 1481		002 644 / 2					
82	Gleitstreifen vorne	1	131 480 / 2					
83	Gleitstreifen hinten	1	131 481 / 2					
84	Fuehrungsplatte	1	131 179 / 2					
85	Skt.Schraube M16x70 DIN 931	1	005 733 / 4					
86	Federring A16 DIN 127	1	000 464 / 4					
87	Distanzbuchse	1	131 285 / 4					
88	Kulissenklotz	1	131 284 / 4					
89	Skt.Schraube M24x120 DIN 931	1	099 688 / 4					
90	Federring A24 DIN 127	1	040 117 / 4					
91	Skala Zoll	5	154 919 / 1					
92	Nonius rechts Zoll	5	154 918 / 1					
	Flachkopfschraube M4x8 DIN 85		072 395 / 2					
93	Buegel	5	131 834 / 1					
	Skt.Schraube M8x16 DIN 933		000 279 / 2					
	Federring A8 DIN 127		000 618 / 2					
	Skt.Schraube M10x70 DIN 933 (Transportsicherung)		000 785 / 1					
	Scheibe 10,5 DIN 7349 (Transportsicherung)		086 778 / 1					

Spare parts lists US - execution 07.07.94 Schmit	• Folding machine •		page 24 of page 47
	RAS 74.20-40	GRUNDMASCHINE: Unterwangenauflage Und Unterwangenverstellung	

Pos.	denomination	page	part`s number / number of pieces					
			74.20-40	74.20	74.25	74.30	74.40	
	UNTERWANGENAUFLAGE							
100	Geteilte Unterwangenauflage	1		134 045 / 1	134 084 / 1	131 198 / 1	133 529 / 1	
101	Klemmstueck	1		131 177 / 21	131 177 / 24	131 177 / 27	131 177 / 31	
102	Konus	1		131 178 / 21	131 178 / 24	131 178 / 27	131 178 / 31	
103	Zyl.Schraube M8x20 DIN 912	1		001 412 / 21	001 412 / 24	001 412 / 27	001 412 / 31	
	UNTERWANGENVERSTELLUNG							
110	Stellwelle	6		133 152 / 1	134 291 / 1	131 279 / 1	133 512 / 1	
111	Rillenkugellager 30x62	6	040 635 / 2					
112	Stuetzscheibe 50x3x62	6	102 022 / 2					
113	Sicherungsring 62x2 DIN 472	6	040 634 / 2					
114	Stuetzscheibe 30x2,5x42	6	047 037 / 6					
115	Sicherungsring 30x1,5 DIN 471	6	000 436 / 4					
116	Kegelrad M=5 Z=18	6	131 136 / 4					
117	Passfeder A8x7x36 DIN 6885	6	000 435 / 4					
118	Laufring 35 DIN 2209	6	000 862 / 2					
119	Universal-Ratsche	6	136 780 / 1					
120	DU-Buchse MB3530	6	063 964 / 4					
121	Axialrollenlager 35x62	6	131 137 / 2					
122	Verstellspindel links	6	131 280 / 1					
123	Verstellspindel rechts	6	131 281 / 1					
124	Spindelmutter links	6	131 278 / 1					
125	Spindelmutter rechts	6	131 282 / 1					
126	Gewindestift AM12x40 DIN 914	6	005 476 / 4					
127	Skt.Mutter M12 DIN 934	6	000 247 / 4					
128	Flanschlager	6	111 193 / 1					
129	Zyl.Schraube M10x30 DIN 912	6	001 104 / 2					
130	Federring A10 DIN 127	6	000 489 / 2					
131	Distanzbuchse	6	102 434 / 2					
132	Ratschenverlaengerung	6	132 702 / 1					

Pos.	denomination	page	part`s number / number of pieces				
			74.20-40	74.20	74.25	74.30	74.40
	BIEGEWANGE KPL.						
150	Biegewange	1		135 401 / 1	143 591 / 1	134 041 / 1	137 596 / 1
151	Biegeschiene 30	1		132 937 / 1	132 938 / 1	131 400 / 1	132 939 / 1
	Zyl.Schraube M12x35 DIN 6912			006 214 / 5	006 214 / 6	006 214 / 7	006 214 / 9
152	Skala Zoll	2/3	154 919 / 2				
153	Nonius links Zoll	1	154 917 / 1				
	Nonius rechts Zoll		154 918 / 1				
154	Distanzklotz	1	131 835 / 2				
	Flachkopfschraube M4x20 DIN 85		002 187 / 4				
	Scheibe 4,3 DIN 7349		134 849 / 4				
155	Fuehrungsbuchse	1	131 271 / 2				
156	Fuehrungsscheibe	1	131 270 / 2				
157	Zyl.Schraube M16x80 DIN 912	1	002 501 / 2				
	Schutzblech links		134 770 / 1				
158	Schutzblech rechts	1	134 771 / 1				
	Senkschraube M6x12 DIN 7991		003 657 / 4				
	ANTRIEB BIEGEWANGE						
170	Welle	8		133 169 / 1	134 293 / 1	131 172 / 1	133 518 / 1
171	Lagerbock	8		132 574 / 3	132 574 / 3	132 574 / 4	132 574 / 5
	Federring 6 DIN 7980			001 663 / 6	001 663 / 6	001 663 / 8	001 663 / 10
	Zyl.Schraube M6x25 DIN 912			002 855 / 6	002 855 / 6	002 855 / 8	002 855 / 10
172	Motorwinkel	8	131 166 / 1				
	Scheibe B 6,4 ST DIN 125		000 683 / 3				
	Zyl.Schraube M6x12 DIN 912		001 124 / 3				
173	D-Motor 0,21 KW	8	153 890 / 1				
174	Senkschraube M5x12 DIN 7991	8	003 478 / 4				
175	Zahnriemenscheibe Z=15	8	131 131 / 1				
176	Ringspannelement	8	131 162 / 1				

Pos.	denomination	page	part's number / number of pieces					
			74.20-40	74.20	74.25	74.30	74.40	
177	Spanndeckel	8	131 171 / 1					
178	Federring A5 DIN 127	8	005 646 / 4					
179	Skt.Schraube M5x20 DIN 933	8	145 613 / 4					
180	Zahnriemenrad Z=48	8	131 168 / 1					
181	Muffe	8	131 173 / 2					
	Spannhuelse 2,5x16 DIN 1481		114 467 / 4					
182	Schneckenwelle	8	131 174 / 2					
183	Schraegkugellager 10x30	8	131 163 / 4					
184	Distanzring	8	131 175 / 4					
185	Passfeder A3x3x25 DIN 6885	8	131 160 / 2					
186	Schnecke	8	131 161 / 2					
187	Zahnriemen T=5	8	132 201 / 1					
188	Gehaeuse	8	131 116 / 2					
189	Federring A8 DIN 127	8	000 618 / 8					
190	Zyl.Schraube M8x25 DIN 912	8	000 395 / 8					
191	Sicherungsring 30x1,2 DIN 472	8	104 026 / 4					
192	Verstellmutter	8	131 110 / 2					
193	Buechse	8	131 109 / 2					
194	Axial-Scheibe AS5070	8	074 514 / 2					
195	Axial-Zylinderrollen-Lager 81110TN	8	111 002 / 2					
196	Spezial-Tellerfeder	8	132 731 / 36					
	Netzanschlussdose		050 223 / 1					
197	Fuehrungsstange	8	131 114 / 2					
198	Schmierkopf 6 DIN 3402	8	000 164 / 2					
	Klemmblech		137 144 / 2					
	Linsenschraube M4x12 DIN 7985		000 779 / 4					
	Skt.Mutter M5 DIN 934		001 973 / 4					

Pos.	denomination	page	part`s number / number of pieces					
			74.20-40	74.20	74.25	74.30	74.40	
	TRAVERSE KPL.							
210	Traverse	4		153 986 / 1	153 777 / 1	153 987 / 1	153 989 / 1	74.40: 4-Meter-Anschlag
210	Traverse	4					153 988 / 1	74.40: 3-Meter-Anschlag
211	Spannhuelse 12x32 leicht DIN 7346	4	106 890 / 4					
212	Scheibe B 10,5 ST DIN 125	4	000 038 / 4					
213	Zyl.Schraube M10x55 DIN 912	4	007 533 / 4					
214	Abdeckblech	4		153 990 / 1	153 759 / 1	153 991 / 1	153 993 / 1	74.40: 4-Meter-Anschlag
215	Abdeckblech	4				155 391 / 1	155 397 / 1	74.40: 4-Meter-Anschlag
214	Abdeckblech	4					153 992 / 1	74.40: 3-Meter-Anschlag
215	Abdeckblech	4					155 394 / 1	74.40: 3-Meter-Anschlag
	Zyl.Schraube M6x30 DIN 912			001 729 / 2	001 729 / 2	001 729 / 3	001 729 / 4	74.40: 4-Meter-Anschlag
	Zyl.Schraube M6x30 DIN 912						001 729 / 5	74.40: 3-Meter-Anschlag
	Zyl.Schraube M8x20 DIN 912		001 412 / 4					
	Scheibe B 8,4 ST DIN 125		000 656 / 4					
	Zyl.Schraube M6x10 DIN 912			001 467 / 2	001 467 / 2	001 467 / 5	001 467 / 5	
	Scheibe B 6,4 ST DIN 125			000 683 / 2	000 683 / 2	000 683 / 5	000 683 / 5	
	SEITENTEIL RECHTS							
230	Seitenteil rechts	3	131 240 / 1					
231	Gewindestift M16x55 DIN 915	3	122 880 / 2					
232	Skt.Mutter M16 DIN 934	3	000 232 / 2					
233	Zylinderrollenlager zweireihig	3	131 106 / 1					
234	Zylinderrollenlager einreihig	3	131 107 / 1					
235	Sicherungsring 140x4 DIN 472	3	046 729 / 1					
236	Distanzring	3	162 560 / 1					
237	Distanzring	3	131 272 / 1					
238	Haltering	3	131 273 / 1					
239	Senkschraube M6x20 DIN 7991	3	000 387 / 4					
240	O-Ring 115x3	3	009 348 / 1					

Pos.	denomination	page	part's number / number of pieces					
			74.20-40	74.20	74.25	74.30	74.40	
241	Biegewangenwelle	3	131 113 / 1					
242	Halter	3	131 257 / 1					
243	Gewindestift AM12x40 DIN 914	3	005 476 / 1					
	Gleitstreifen		131 221 / 2					
	Verschlussdeckel		121 071 / 3					
244	Leiste	5	131 220 / 1					
	Scheibe B 8,4 ST DIN 9021		040 032 / 4					
	Scheibe 8,4 DIN 7349		086 777 / 12					
	Skt.Schraube M8x30 DIN 933		001 060 / 4					
	SEITENTEIL LINKS							
250	Seitenteil links	2	131 250 / 1					
251	Gewindestift M16 DIN 934	2	122 880 / 2					
252	Skt.Mutter M16 DIN 934	2	000 232 / 2					
253	Zylinderrollenlager	2	131 106 / 1					
254	Zylinderrollenlager	2	131 107 / 1					
255	Sicherungsring 140x4 DIN 472	2	046 729 / 1					
256	Distanzring	2	162 560 / 1					
257	Distanzring	2	131 272 / 1					
258	Haltering	2	131 273 / 1					
259	Senkschraube M6x20 DIN 7991	2	000 387 / 4					
260	O-Ring 115x3	2	009 348 / 1					
261	Biegewangenwelle	2	131 113 / 1					
262	Halter	2	131 257 / 1					
263	Gewindestift AM12x40 DIN 914	2	005 476 / 1					
	Gleitstreifen		131 221 / 2					
	Verschlussdeckel		121 071 / 3					
264	Winkel	5	147 972 / 1					
	Zyl.Schraube M6x10 DIN 912		001 467 / 2					
	Scheibe A 6,4 St-Zn DIN 125		006 883 / 2					

Pos.	denomination	page	part`s number / number of pieces					
			74.20-40	74.20	74.25	74.30	74.40	
	MESSEN UND SCHALTEN							
280	Geber-Kupplung	3	131 275 / 1					
	Skt.Schraube M4x16 DIN 933		055 474 / 3					
	Federring A4 DIN 127		001 665 / 3					
	Gewindestift AM4x16 DIN 914		104 985 / 2					
281	Impulsgeber	3	131 489 / 1					
	Flachkopfschraube M3x8 DIN 85		133 552 / 3					
	Skt.Mutter M3 ZN DIN 7		040 456 / 3					
282	Klemmscheibe	3	131 277 / 6					
283	Drehmomentenstuetze	3	131 276 / 1					
284	Zyl.Stift 10m6x40 DIN 7	3	000 513 / 1					
	Endtaster 3SE3 120 1D		086 995 / 2					
	Zyl.Schraube M5x40 DIN 912		088 811 / 4					
	Zyl.Schraube M6x20 DIN 912		001 289 / 4					
	Federring A6 DIN 127		000 129 / 4					
285	Gewindebolzen	2	131 531 / 1					
286	Fixierscheibe	2	131 530 / 1					
287	Schaltscheibe kpl.	2	131 528 / 1					
288	Skalenscheibe kpl.	2	131 560 / 1					
289	Scheibe	2	131 533 / 1					
290	Gewindebolzen	2	131 535 / 1					
	Spannhuelse 4x20 DIN 1481		000 662 / 1					
291	Raendelscheibe	2	131 536 / 1					
292	Schalterplatte	2	131 527 / 1					
293	Senkschraube M16x30 DIN 7991	2	132 585 / 2					
294	Reihengrenztaster	2	068 350 / 1					
	Zyl.Schraube M6x25 DIN 912		002 855 / 4					
	Gewindestift M5x12 DIN 914		042 847 / 1					

Pos.	denomination	page	part`s number / number of pieces					
			74.20-40	74.20	74.25	74.30	74.40	
	ABDECKUNGEN							
300	Abdeckhaube hinten links	5	155 003 / 1					
301	Abdeckhaube vorne links	5	155 007 / 1					
302	U-Blech	5	155 012 / 1					
303	Abdeckhaube rechts	5	131 495 / 1					
	Zyl.Schraube M6x10 DIN 912		001 467 / 21					
	Zyl.Schraube M6x16 DIN 912		001 150 / 2					
	Scheibe A 6,4 St-Zn DIN 125		006 883 / 4					
	Verbus Schraube M6x10		062 972 / 4					
	Zyl.Schraube M6x10 DIN 912		001 467 / 6					
304	Schutzblech links	5	131 496 / 1					
305	Schutzblech rechts	5	131 497 / 1					
306	Winkel	5	133 553 / 2					
	Pop-Blindniet 3,2		131 850 / 4					
	Senkschraube M6x10 DIN 7991		001 778 / 6					
307	Geberabdeckung	5	132 586 / 1					
308	Haube	5	155 013 / 2					
	Distanzbuchse		133 547 / 2					
	Zyl.Schraube M6x45 DIN 912		061 626 / 2					
	Scheibe B 6,4 ST DIN 125		000 683 / 2					
309	Abdeckung Fuehrung rechts	5	132 867 / 1					
310	Abdeckung Fuehrung links	5	132 868 / 1					
	Senkschraube M6x20 DIN 7991		000 387 / 4					
	HYDRAULIKZYLINDER KPL.		130 886 / 2					
320	Hydraulikzylinder	7	130 887 / 1					
321	Spannstange	7	130 897 / 2					
322	Spez.Nutmutter	7	132 706 / 2					
323	Stuetzscheibe 42x2,5	7	056 272 / 2					
324	Zylinderaufnahmeklotz	7	130 898 / 1					

Pos.	denomination	page	part`s number / number of pieces					
			74.20-40	74.20	74.25	74.30	74.40	
325	Spannmutter	7	130 899 / 2					
326	Skt.Schraube M16x100 DIN 933	7	005 742 / 1					
327	Scheibe B 17 ST DIN 125	7	000 449 / 1					
328	Tellerfeder 34x16,3x2	7	051 551 / 4					
329	Halteqabel	7	130 900 / 1					
330	Zyl.Schraube M10x40 DIN 6912	7	009 488 / 4					
331	Tellerfeder 20x10,2x1,5	7	118 113 / 24					
	ANTRIEBSEINHEIT		131 234 / 1					
340	D-Motor 9 KW	2	153 891 / 1					
341	Skt.Schraube M12x35 DIN 933	2	002 438 / 4					
342	Federring A12 DIN 127	2	001 113 / 4					
343	Motorabdeckung	2	133 548 / 1					
	Verbus Schraube M6x10		062 972 / 2					
344	Hydraulik-Pumpe	2	093 850 / 1					
345	Zentrierring	2	131 181 / 1					
346	Skt.Schraube M12x100 DIN 931	2	001 613 / 2					
347	Unterlegscheibe	2	003 592 / 2					
348	Federring A12 DIN 127	2	001 113 / 2					
349	Skt.Mutter M12 DIN 934	2	000 247 / 2					
350	Elastische Kupplung E97	2	093 857 / 1					
	Gewindestift AM6x16 DIN 914		000 948 / 2					
351	Anschlussflansch	9	153 764 / 1					
352	O-Ring 37,7x3,53	9	136 203 / 1					
	Federring A10 DIN 127		000 489 / 4					
	Zyl.Schraube M10x35 DIN 912		001 250 / 4					
	Guttasyn-Schlauch		057 840 / 1m					
	SKF-Stahlband 9mm		057 841 /0,6m					
	Uni-Schlauchbinder		057 842 / 2					
353	Flansch	9	135 007 / 1					

Spare parts lists US - execution	• Folding machine •	page 32
07.07.94 Schmit	RAS 74.20-40 GRUNDMASCHINE: Antriebseinheit, Tank kpl. und Steuereinheit kpl.	of page 47

Pos.	denomination	page	part's number / number of pieces					
			74.20-40	74.20	74.25	74.30	74.40	
354	O-Ring 28x3,5	9	041 833 / 1					
	Zyl.Schraube M10x35 DIN 912		001 250 / 4					
	Federring A10 DIN 127		000 489 / 4					
355	EO-Verschraubung GE16SR	9	004 415 / 1					
	TANK KPL.							
360	Oeltank	4	153 766 / 1					
361	Blindstopf B-1/2	4	051 003 / 1					
362	Oelauge M26x1,5	4	008 953 / 2					
	Skt.Mutter M26x1,5 DIN 80705		098 940 / 2					
363	Luftfilter + Sieb	4	135 406 / 1					
364	Auecklauffilter	4	135 407 / 1					
365	Micro-Top-Patrone (Ersatzpatrone)	4	135 408 / 1					
	Skt.Schraube M8x20 DIN 933		000 230 / 2					
366	Schlauchtuelle	4	099 438 / 1					
	Zyl.Schraube M8x20 DIN 912		001 412 / 2					
	Linsenschraube M5x16 DIN 7985		001 532 / 6					
	Skt.Mutter M5 DIN 934		001 973 / 6					
367	Revisionsdeckel	4	146 921 / 2					
	SKF-Stahlband 9mm		057 841 /1,2m					
	UNI-Schlauchbinder		057 842 / 8					
	STEUEREINHEIT KPL.							
380	Hydrauliksteuerung	9	147 480 / 1					
381	Messanschluss	9	135 356 / 1					
382	Stromregelventil	9	132 200 / 1					
	Zyl.Schraube M8x100 DIN 912		133 549 / 2					
	Federring A8 DIN 127		000 618 / 4					
	Zyl.Schraube M8x60 DIN 912		000 947 / 2					

Pos.	denomination	page	part`s number / number of pieces					
			74.20-40	74.20	74.25	74.30	74.40	
383	Verschraubung DSVW16-SR	9	004 436 / 2					
384	Verschraubung GE6-SR	9	001 919 / 6					
385	Verschraubung DSVW20-SR	9	004 437 / 1					
386	Schlauchtuelle	9	131 475 / 1					
387	Gummi-Oelschlauch	9	097 140 / 1m					
388	Verschraubung GE16-SR	9	004 415 / 2					
389	Verschraubung GE8-LR	9	001 914 / 1					
390	Verschraubung T8-L	9	054 344 / 1					
391	Hydraulik Druckschalter	9	135 315 / 1					
392	Aufsteckstutzen 16	9	005 366 / 1					
393	Verschraubung T16-S	9	005 395 / 1					
394	Verschraubung GE16-SR	9	004 415 / 1					
395	Uebergangsstutzenmuffe	9	006 575 / 1					
	Drosselscheibe		146 471 / 1					
	Verschluss-Schraube R1/2"		070 889 / 1					
	ANTRIEB OBERWANGE		131 237 / 1					
410	Rueckschlagventil	9	131 105 / 2					
411	Verschraubung DSVW16-SR	9	004 436 / 6					
412	Aufsteckstutzen 16	9	005 366 / 4					
413	Verschraubung DSVW8-SR	9	068 224 / 2					
414	Verschraubung GE16-SR	9	004 415 / 2					
415	Druckbegrenzungsventil	9	131 103 / 2					
416	Verschraubung W16-S	9	004 440 / 7					
417	Verschraubung EVW16-S	9	087 097 / 2					
418	Verschraubung W8-L	9	054 347 / 2					
419	Verschraubung G8-S	9	007 809 / 1					
420	Verschraubung T16-S	9	005 395 / 1					

Spare parts lists

US - execution

07.07.94 Schmit

Folding machine

RAS 74.20-40

GRUNDMASCHINE:
Antrieb Biegewange und Rohrbefestigung kpl.

Pos.	denomination	page	part's number / number of pieces					
			74.20-40	74.20	74.25	74.30	74.40	
	ANTRIEB BIEGEWANGE		131 239 / 1					
430	Drehkolbenzylinder	2/3	130 410 / 2					
	Zyl.Schraube M16x80 DIN 912		002 501 / 20					
	Federring		000 464 / 12					
431	Uebergangsstutzenmuffe (Uebergangsstutzen)	9	058 839 / 4					
432	Verschraubung DSVW16-SR	9	004 436 / 4					
433	Verschraubung T16-S	9	005 395 / 1					
434	Aufsteckstutzen 16	9	005 366 / 1					
435	Druckbegrenzungsventil	9	131 104 / 1					
436	Verschraubung GE16-SR	9	004 415 / 1					
437	Verschraubung W16-S	9	004 440 / 4					
438	Verschraubung EVW16-S	9	087 097 / 1					
	ROHRBEFESTIGUNG KPL.			133 163 / 1	133 163 / 1	132 578 / 1	133 526 / 1	
450	Rohrschelle	4	005 382 / 2					
	Zyl.Schraube M6x30 DIN 912		001 729 / 4					
	Federring A6 DIN 127		000 129 / 4					
	Schl.-Klemmleiste			048 667 / 1	048 667 / 1	048 667 / 1	048 667 / 2	
	Zyl.Schraube M5x16 DIN 912		005 540 / 5					
	Federring A5 DIN 127		005 646 / 5					
451	Rohrhalter	4		007 204 / 4	007 204 / 4	007 204 / 5	007 204 / 6	
	Skt.Schraube M8x35 DIN 931			001 805 / 6	001 805 / 6	001 805 / 8	001 805 / 10	
	Federring A8			000 618 / 6	000 618 / 6	000 618 / 8	000 618 / 10	
452	Rohrhalter	4	132 579 / 1					
	Skt.Schraube M8x20 DIN 933		000 230 / 1					
	Federring A8		000 618 / 1					
	Skt.Schraube M8x35 DIN 933		001 210 / 2					
	Federring A8		000 618 / 2					

Pos.	denomination	page	part`s number / number of pieces				
			74.20-40	74.20	74.25	74.30	74.40
	OBERWANGENHALT 0-12MM						
460	Zylinderstift 12x80 DIN 6325	12	004 311 / 1				
461	Anlagescheibe 12x24	12	046 979 / 2				
462	DU-Buchse MB1215	12	051 548 / 2				
463	Stellring A12 DIN 705	12	057 212 / 1				
464	Wippe	12	134 166 / 1				
465	Zwischenplatte	12	134 164 / 1				
466	Endtaster 3SE3 120 1D	12	086 995 / 1				
467	Zyl.Schraube M5x55 DIN 912	12	007 763 / 2				
468	Verstellplatte	12	134 163 / 1				
469	Zyl.Schraube M6x30 DIN 912	12	001 729 / 2				
470	DU-Buchse MB0610	12	064 213 / 2				
471	Tellerfeder 12x6,2x0,5	12	114 707 / 8				
472	Sicherungsring 6x0,7 DIN 471	12	001 767 / 1				
473	Skt.Mutter M6 DIN 934	12	000 682 / 2				
474	Gewindestange	12	134 165 / 1				
475	Druckstueck	12	134 170 / 1				
476	Drehknopf	12	107 610 / 1				
477	Schaltnocken	12	134 171 / 1				
	FUSSTRITTSCHALTER						
480	Fuss-Schalter 3-fach	13	045 563 / 1				

Pos.	denomination	page	part`s number / number of pieces					
			74.20-40	74.20	74.25	74.30	74.40	
	FUEHRUNG KPL. (aus Fahreinheit)		114 144 / 1					
500	Fuehrung	15	114 175 / 1					
501	Spannhuelse 10x40 DIN 1481	15	002 569 / 1					
502	Skt.Schraube M12x50 DIN 933	15	001 565 / 2					
503	Scheibe B 13 ST DIN 125	15	000 269 / 2					
504	Tellerfeder 23x12,2	15	108 112 / 12					
505	Skt.Schraube M12x35 DIN 933	15	002 438 / 1					
506	Unterlegscheibe	15	003 592 / 1					
	ANTRIEB & MESSEN KPL.		114 145 / 1					
510	Motortraeger	14	121 804 / 1					
511	Zyl.Schraube M10x25 DIN 912	14	000 897 / 6					
512	Federring 10 DIN 7980	14	000 926 / 6					
513	Spannhuelse 6x30 DIN 1481	14	001 149 / 4					
514	Gleichstrom-Servo-Motor	14	123 344 / 1					
515	Flansch	14	120 549 / 1					
516	Zyl.Schraube M8x25 DIN 912	14	000 395 / 4					
517	Federring A8 DIN 127	14	000 618 / 12					
518	Zyl.Schraube M8x150 DIN 912	14	122 108 / 4					
519	Skt.Mutter M8 DIN 934	14	000 031 / 4					
520	Sicherungsring 40x1,75 DIN 472	14	057 996 / 1					
521	Stuetzscheibe 28x2 DIN 988	14	047 081 / 2					
522	Kegelrollenlager 17x40	14	053 399 / 2					
523	Nilosring 30203 AV	14	064 890 / 2					
524	Distanzring	14	158 006 / 1					
525	Nutmutter M17x1	14	114 584 / 1					
	Spannhuelse 3x16 DIN 1481	14	001 757 / 1					
526	Kupplung 19/24 Alu	14	114 136 / 1					
527	Spannhuelse 6x40 DIN 1481	14	000 034 / 1					
528	Kugelrollenumlaufspindel & Einfachspindelmutter	14	113 770 / 1					

Pos.	denomination	page	part's number / number of pieces					
			74.20-40	74.20	74.25	74.30	74.40	
529	Mutterflansch gr.	14	114 184 / 1					
530	Schmierkopf 6 DIN 3402	14	000 164 / 1					
531	Zyl.Schraube M5x16 DIN 912	14	005 540 / 4					
532	Federring A5 DIN 127	14	005 646 / 4					
533	Kugelscheibe C8 4 DIN 6319	14	071 486 / 4					
534	Kegelpfanne D9,6 DIN 6319	14	071 487 / 4					
535	Skt.Mutter M8 DIN 934	14	000 031 / 6					
536	Spindellager	14	114 181 / 1					
537	Platte	14	158 433 / 1					
538	Skt.Schraube M8x20 DIN 933	14	000 230 / 2					
539	Rillenkugellager 17x40	14	049 123 / 1					
540	Spidex-Kupplung A 15	14	114 137 / 1					
	Spannhuelse 3x24 DIN 1481		000 133 / 2					
541	Impulsgeber	14	114 138 / 1					
	Zyl.Schraube M5x16 DIN 912		005 540 / 4					
	Zyl.Schraube M4x20 DIN 84		001 421 / 2					
	Kabelbinder 130		124 295 / 5					
	SCHLITTEN KPL.							
550	Schlitten	15	114 105 / 1					
551	Lagerbolzen	15	114 120 / 2					
552	Spannhuelse 6x60 DIN 1481	15	003 546 / 2					
553	Rillenkugellager 30x55	15	006 305 / 12					
554	Stuetzscheibe 30x2,5	15	047 037 / 30					
555	Sicherungsring 30x1,5 DIN 471	15	000 436 / 18					
556	Lagerbolzen	15	114 104 / 2					
557	Lagerplatte	15	114 211 / 4					
558	Zyl.Schraube M8x20 DIN 912	15	001 412 / 8					
559	Federring A8 DIN 127	15	000 618 / 8					
560	Scheibe 8,4 DIN 7349	15	086 777 / 8					

Spare parts lists US - execution 07.07.94 Schmit	• Folding machine •		page 38 of page 47
	RAS 74.20-40	ZUSATZEINRICHTUNG: MULTIBEND 2000 / 9000 Schlitten kpl. und Endtaster-Anschlag kpl.	

Pos.	denomination	page	part's number / number of pieces					
			74.20-40	74.20	74.25	74.30	74.40	
561	Spannhuelse 6x16 DIN 1481	15	000 388 / 8					
562	Lagerschwinge	15	114 116 / 2					
563	Lagerschwinge	15	114 119 / 2					
564	Zyl.Schraube M6x16 DIN 912	15	001 150 / 4					
565	Zugfeder	15	114 135 / 2					
566	Lagerbolzen	15	114 121 / 2					
567	Zyl.Schraube M8x70 DIN 912	15	059 780 / 2					
568	Skt.Mutter M8 DIN 934	15	000 031 / 4					
569	Tellerfeder 15x8,2x0,8	15	045 625 / 36					
570	Gewindestift AM8x35 DIN 915	15	155 365 / 2					
571	Spannhuelse 8x50 DIN 1481	15	002 644 / 4					
572	Schaltwinkel	15	114 212 / 1					
	Skt.Schraube M6x16 DIN 933		001 791 / 2					
	Federring A6 DIN 127		000 129 / 2					
573	Schaltwinkel	15	114 400 / 1					
574	Abstreifer	15	117 245 / 2					
575	Skt.Schraube M6x16 DIN 933	15	001 791 / 2					
576	Scheibe B 6,4 ST DIN 125	15	000 683 / 4					
	ENDTASTER-ANSCHLAG KPL.							
585	Efector M12x1 GL	15	109 588 / 1					
	Grenztaster		114 139 / 2					
586	Endschalterklotz	15	114 214 / 1					
587	Skt.Schraube M6x70 DIN 933	15	051 246 / 1					
588	Skalenscheibe	15	114 213 / 1					
589	Zylinderstift 8m6x80 DIN 7	15	000 945 / 1					
	Zylinderstift 6m6x14 DIN 7		000 393 / 1					
590	Druckfeder	15	005 642 / 1					
591	Winkel	15	116 100 / 1					
592	Skt.Schraube M6x12 DIN 933	15	000 985 / 2					
593	Federring A6 DIN 127	15	000 129 / 4					

Pos.	denomination	page	part`s number / number of pieces				
			74.20-40	74.20	74.25	74.30	74.40
	SONSTIGES ZUR FAHREINHEIT						
600	Klemmenkasten	14	114 459 / 1				
601	El.Magnetventil 3/2	14	132 587 / 2				
	Flachkopfschraube M3x30 DIN 85		073 717 / 4				
	Schwenkverschraubung M5 PK-4		094 014 / 4				
	Verteilerstueck		133 083 / 1				
	Dichring O-M5 PVC		105 518 / 4				
	RAHMEN KPL. (aus Komplettiereinheit)			134 574 / 1	134 079 / 1	131 154 / 1	131 154 / 1
610	Rahmen	16		115 055 / 1	114 082 / 1	127 422 / 1	127 422 / 1
611	Aufnahmebolzen	16	131 157 / 2				
612	Bolzen	16	114 103 / 2				
613	Sicherungsring 16x1 DIN 471	16	000 825 / 4				
614	Kabelrinne	16		115 059 / 1	114 465 / 1	117 027 / 1	117 027 / 1
	Verbus-Schraube M6x10			062 972 / 3	062 972 / 4	062 972 / 4	062 972 / 4
615	Winkel links	16	118 892 / 1				
616	Winkel rechts	16	121 954 / 1				
	Zyl.Schraube M6x16 DIN 912		001 150 / 8				
	Scheibe B 6,4 ST DIN 125		000 683 / 8				
	Skt.Mutter M6 DIN 934		000 682 / 8				
	ABSTUETZUNG KPL.		131 155 / 1				
620	Aufnahmewinkel	16	131 158 / 2				
621	Scheibe 13 DIN 7349	16	086 779 / 8				
622	Skt.Schraube M12x35 DIN 933	16	002 438 / 8				
623	Spannhuelse 10x40 DIN 1481	16	002 569 / 4				
624	Zyl.Schraube M10x20 DIN 912	16	001 525 / 2				
625	Haltewinkel	16	131 159 / 2				
626	Scheibe B 10,5 ST DIN 125	16	000 038 / 8				
627	Skt.Schraube M10x35 DIN 933	16	002 784 / 8				

Spare parts lists US - execution 07.07.94 Schmit	• Folding machine •	page 40 of page 47
RAS 74.20-40	ZUSATZEINRICHTUNG: MULTIBEND 2000 / 9000 Abstuetzung kpl., Anschlagtraeger kpl. und Pneumatik kpl.	

Pos.	denomination	page	part`s number / number of pieces					
			74.20-40	74.20	74.25	74.30	74.40	
628	Spannhuelse 10x40 DIN 1481	16	002 569 / 4					
629	Stuetze	16	117 029 / 2					
630	Druckbolzen	16	114 094 / 2					
631	Skt.Mutter M12 DIN 934	16	000 247 / 2					
632	Sicherungswinkel	16	138 012 / 2					
	Verbus-Schraube M6x10		062 972 / 4					
	Spannhuelse 4x45 DIN 1481		004 997 / 2					
	ANSCHLAGTRAEGER KPL.			118 098 / 1	118 104 / 1	114 620 / 1	114 620 / 1	
640	Anschlagtraeger	16		127 558 / 1	127 611 / 1	127 432 / 1	127 432 / 1	
641	Zyl.Schraube M10x55 DIN 912	16	007 533 / 4					
642	Federring 10 DIN 7980	16	000 926 / 4					
643	Kegelstift 10x50 DIN 7978	16	004 687 / 4					
644	Betaetigungsgestaenge	16		141 451 / 2	141 009 / 2	141 015 / 2	141 015 / 2	
	Zyl.Schraube M6x40 DIN 912			004 624 / 18	004 624 / 22	004 624 / 24	004 624 / 24	
	Scheibe B 6,4 ST DIN 125			000 683 / 18	000 683 / 22	000 683 / 24	000 683 / 24	
645	Gleitstreifen	16	131 557 / 4					
	Pop-Blindniet 3,2		041 184 / 8					
646	Blattfeder	16		141 016 / 18	141 016 / 20	141 016 / 22	141 016 / 22	
	Zyl.Schraube M5x10 DIN 912			002 657 / 36	002 657 / 40	002 657 / 44	002 657 / 44	
	PNEUMATIK KPL.		114 621 / 1					
650	Klotz	14	117 043 / 2					
651	Zyl.Schraube M6x40 DIN 912	14	004 624 / 4					
652	Federring A 6 DIN 127	14	000 129 / 8					
653	Zyl.Schraube M6x16 DIN 912	14	001 150 / 4					
654	Lagerbock	14	102 750 / 2					
655	Pneumatikzylinder ESN 20-25 P	14	114 609 / 2					
656	Gabelkopf SG M8	14	102 749 / 2					

Pos.	denomination	page	part`s number / number of pieces				
			74.20-40	74.20	74.25	74.30	74.40
	GE Verschraubung 1/8"-4		049 631 / 3				
657	Kunststoffschlauch PL-4	14	049 632 / 4m				
	RED Nippel 1/8"x1/4"		040 586 / 1				
658	Wartungseinheit R1/4"	14	043 120 / 1				
	Dichtring O-1/4"		040 588 / 2				
	Dichtring O-1/8"		040 589 / 2				
	Schwenkverschraubung M5 PK-4		094 014 / 1				
	ANSCHLAGEINHEIT			129 083 / 9	129 083 / 10	129 083 / 11	129 083 / 11
670	Anschlageinheit	17	132 910 / 1				
671	Zyl.Schraube M6x20 DIN 912	17	001 289 / 1				
672	Zyl.Schraube M6x30 DIN 912	17	001 729 / 1				
673	Skt.Schraube M5x65 DIN 933	17	142 125 / 1				
674	Druckhuelse lang	17	117 034 / 1				
675	Skt.Schraube M5x40 DIN 931	17	142 123 / 1				
676	Skt.Mutter M5 DIN 934	17	001 973 / 2				
	TISCHBLECHE KPL.			137 703 / 1	137 704 / 1	137 705 / 1	137 705 / 1
680	U-Blech 56mm	17	140 889 / 2				
681	U-Blech 106mm	17	140 890 / 1				
682	U-Blech 206mm	17	140 892 / 2				
683	U-Blech 306mm	17		140 893 / 3			
683	U-Blech 343mm	17			140 896 / 4		
683	U-Blech 396mm	17				140 897 / 5	140 897 / 5
684	Blechtraeger	17		127 608 / 1	127 616 / 1	127 426 / 1	127 426 / 1
685	Blechtraeger kpl.	17		141 549 / 1	141 550 / 1	141 551 / 1	141 551 / 1
686	Zyl.Schraube M6x20 DIN 912	17		001 289 / 10	001 289 / 14	001 289 / 18	001 289 / 18
687	Distanzscheibe	17		009 912 / 10	009 912 / 14	009 912 / 18	009 912 / 18

Spare parts lists US - execution 07.07.94 Schmit	• Folding machine •		page 42 of page 47
	RAS 74.20-40	ZUSATZEINRICHTUNG: MULTIBEND 2000 / 9000 Tischbleche kpl., Impulsgeber Biegewange kpl. und Steuerung	

Pos.	denomination	page	part`s number / number of pieces					
			74.20-40	74.20	74.25	74.30	74.40	
688	Skt.Mutter M6 DIN 934	17		000 682 / 10	000 682 / 14	000 682 / 18	000 682 / 18	
689	Schutzblech	17		143 385 / 2	143 385 / 2	143 385 / 1	143 385 / 1	
690	Schutzblech	17				143 388 / 1	143 388 / 1	
691	Distanzhuelse	17	143 391 / 4					
692	Senkschraube M6x45 DIN 7991	17	152 301 / 4					
	Gummi-Streifen 20x2		062 816 /3,5m					
	IMPULSGEBER BIEGEWANGE KPL. (MULTIBEND 9000)		134 834 / 1					Nur MULTIBEND 9000 !
700	Buegel	8	132 575 / 1					
	Zyl.Schraube M4x10 DIN 912		117 987 / 2					
	Federring A4 DIN 127		001 665 / 2					
701	Induktiv-Naehrungsschalter	8	142 049 / 1					
702	Skt.Mutter M8 DIN 439	8	001 061 / 2					
703	Skt.Schraube M6x45 DIN 933	8	049 907 / 2					
704	Skt.Mutter M6 DIN 934	8	000 682 / 2					
705	Geberscheibe	8	132 576 / 1					
706	Gewindestift AM6x10 DIN 915	8	043 975 / 1					
	SCHALTSCHRANK, BEDIENKASTEN UND STEUERUNG							
720	Schaltschrank	5	137 996 / 1					
721	Bedienungskasten	13	134 535 / 1					Nur MULTIBEND 2000 !
722	Bedienungskasten	13	159 208 / 1					Nur MULTIBEND 9000 !
723	Kasten	13	158 653 / 1					Nur MULTIBEND 9000 !
724	Blendenwinkel	13	158 664 / 1					Nur MULTIBEND 9000 !
725	Blende Leistung	13	158 652 / 1					Nur MULTIBEND 9000 !
726	Bedienungsblende	13	134 412 / 1					Nur MULTIBEND 2000 !
727	Bedienungsblende	13	158 651 / 1					Nur MULTIBEND 9000 !
728	Griff	13	134 581 / 1					Nur MULTIBEND 2000 !
729	Griff	13	158 735 / 1					Nur MULTIBEND 9000 !

Pos.	denomination	page	part's number / number of pieces					
			74.20-40	74.20	74.25	74.30	74.40	
	GALGEN KPL.							
740	Galgen	13	131 182 / 1					
741	Lamellen-Kappe	13	121 437 / 2					
742	Sicherungsring 70x2,5 DIN 471	13	003 643 / 1					
	Poly-Druckstueck		106 123 / 2					
	Gewindestift AM8x16 DIN 915		043 976 / 2					
	Spannhuelse 5x28 DIN 1481		040 482 / 2					
	Spannhuelse 5x24 DIN 1481		000 755 / 1					
743	Sicherungsring 50x2 DIN 471	13	000 763 / 1					
744	Tellerfeder 71,5x50,5	13	114 608 / 2					
745	Anlaufscheibe 52x78	13	079 866 / 1					
	Zylinderstift 8m6x20 DIN 7		001 417 / 2					
746	Stellring	13	127 152 / 1					
747	Stellring A70 DIN 705	13	003 663 / 1					
	Zyl.Schraube M8x12 DIN 912		008 510 / 2					
	Zyl.Schraube M10x30 DIN 912		001 104 / 1					
	Skt.Mutter M10 DIN 934		000 039 / 1					
748	Laufscheibe LS5070	13	079 870 / 1					
	HYDRAULIK-OBERWANGE-PARALLEL (MULTIBEND 9000)		147 485 / 1					Nur MULTIBEND 9000 !
755	Zusatzsteuerblock	10	147 481 / 1					
756	Aufsteckstutzen 16	10	005 366 / 1					
	Rohrstutzen-Verschraubung 20616R3		006 567 / 2					
	Verschluss-Verschraubung R1/2" DIN 910		005 910 / 1					
	Dichtring A 22x27 DIN 7603		060 504 / 1					
757	Verschraubung W16S		004 440 / 2					

Spare parts lists
US - execution
21.04.92 Schmit

Folding machine

RAS 74.20-40

ZUSATZEINRICHTUNG: MULTIBEND 2000 / 9000
Unterwangenverstellung motorisch und Oberwangen-Halt 25mm

Pos.	denomination	page	part's number / number of pieces					
			74.20-40	74.20	74.25	74.30	74.40	
	UNTERWANGENVERSTELLUNG MOTORISCH							
780	Stellwelle	18	133 346 / 1					
781	Passfeder A8x7x50 DIN 6885	18	000 882 / 1					
782	Scheibe 10,5 DIN 7349	18	086 778 / 2					
783	Skt.Mutter M10 DIN 934	18	000 039 / 1					
784	Skt.Schraube M10x45 DIN 931	18	004 502 / 1					
785	Aufsteckgetriebemotor	18	154 998 / 1					
786	Scheibe B 6,4 ST DIN 125	18	000 683 / 5					Nur MULTIBEND 2000 !
787	Skt.Schraube M6x16 DIN 933	18	001 791 / 2					- " -
788	Haltewinkel	18	133 354 / 1					- " -
789	Abdeckblech	18	133 542 / 1					- " -
790	Zyl.Schraube M6x10 DIN 912	18	001 467 / 3					- " -
791	Gewindebolzen	18	138 459 / 3					Nur MULTIBEND 9000 !
792	Distanzhuelse	18	138 460 / 3					- " -
793	Skt.Mutter M5 DIN 934	18	001 973 / 3					- " -
794	Scheibe B 5,3 ST DIN 125	18	001 976 / 3					- " -
795	Halteplatte	18	138 461 / 1					- " -
796	Halter	18	138 514 / 1					- " -
797	Scheibe B 6,4 ST DIN 125	18	000 683 / 2					- " -
798	Zyl.Schraube M6x30 DIN 912	18	001 729 / 2					- " -
799	Induktivschalter	18	132 202 / 1					- " -
800	Geberscheibe	18	138 515 / 1					- " -
	Netzanschlussdose		050 223 / 1					
	Linsenschraube M4x10 DIN 7985		001 824 / 2					
	OBERWANGEN-HALT 25MM 45GRAD							
810	Steuernockenhalter	19	162 946 / 1					
811	Hilti-Gewindebolzen	19	164 964 / 3					
812	Skt.Mutter M8 DIN 934	19	000 031 / 6					
813	Scheibe B 8,4 St DIN 125	19	000 656 / 3					

Pos.	denomination	page	part's number / number of pieces					
			74.20-40	74.20	74.25	74.30	74.40	
814	Scheibe 8,4 DIN 7349	19	086 777 / 3					
815	Reihengrenztaster	19	068 350 / 1					Nur MULTIBEND 2000 !
816	Skt.Schraube M6x25 DIN 933	19	001 449 / 4					- " -
817	Federring A 6 DIN 127	19	000 129 / 4					- " -
818	Zylinderstift 6m6x24 DIN 7	19	001 152 / 2					- " -
819	Feineinstellnocken	19	153 653 / 1					- " -
	Skt.Stiftschluessel 3 DIN 911		005 690 / 1					- " -
820	Endtaster 3SE3 120 1D	19	086 995 / 1					Nur MULTIBEND 9000 !
821	Zwischenplatte	19	134 164 / 1					- " -
822	Zyl.Schraube M5x65 DIN 912	19	114 159 / 2					- " -
823	Nutenfeld	19	153 648 / 1					
824	Steuernocken	19	153 652 / 1					
825	Anzeigewinkel	19	153 650 / 1					
826	Skt.Schraube M8x20 DIN 933	19	000 230 / 1					
827	Scheibe 8,4 DIN 7349	19	086 777 / 1					
828	Zylinderstift 8m6x20 DIN 7	19	001 417 / 2					
829	Schaltabdeckung	19	162 947 / 1					
	Scheibe 4,3x12 V DIN 9021		133 551 / 1					
	Pop-Blindniet 4		102 490 / 1					
	MESSEINRICHTUNG OBERWANGE (Gemeinsame Teile)		/ 2					Nur MULTIBEND 9000 !
860	Gehaeuse	20	144 720 / 1					
861	Scheibe 6,4 DIN 7349	20	118 721 / 2					
862	Zyl.Schraube M6x30 DIN 912	20	001 729 / 2					
863	Drehgeber ROD 420	20	127 230 / 1					
	Flachkopfschraube M3x16 DIN 85		002 190 / 3					
864	Messtrommel	20	144 721 / 1					
865	Gewindestift AM4x16 DIN 914	20	104 985 / 2					
866	Messband	20	144 722 / 1					